Written Comments Received During the Public Scoping Period

for the
Alberhill-Ivyglen Projects

Proposed by Southern California Edison

September 2009 – November 2016

Table of Contents

Federal Agencies 3
U.S. Fish and Wildlife Service 4
Federal Emergency Management Agency 12
State Agencies 14
California Department of Fish and Wildlife 4
Office of Emergency Services - Johl, Balbir 15
Office of Ratepayer Advocates, CPUC 16
Local Agencies 36
City of Lake Elsinore 37
City of Moreno Valley Planning Division 51
City of Wildomar 52
County of Riverside Planning Department 60
County of Riverside Transportation and Land Management Agency 65
Native American Tribes 31
Temecula Band of Luiseno Mission Indians 32
Organizations 68
Bay Area Municipal Transmission Group 69
CGS3 76
Diversified Pacific 95
Forestar Toscana Development Company 106
FRONTLINES 116
Giardinelli Law Group 169
Nevada Hydro 196
Nevada Hydro Attachment 1 206
Nevada Hydro Attachment 2 435

Federal Agencies

Freeman, Emma

From: Thiede, James <james_thiede@fws.gov>
Sent: Friday, July 15, 2016 8:33 PM
To: VIG/ASP
Cc: Karin Cleary-Rose; Pert, Heather@Wildlife; kim.freeburn@wildlife.ca.gov
Subject: CDFW & USFWS Comments on the Valley-Ivyglen & Alberhill System combined DEIR
Attachments: 16B0316-16CPA0338_WRIV jt_V-Ivyglen & Alberhill Transm Lines DEIR 20160715.pdf

Dear CPUC,

Attached to this message you will find a joint letter from the Wildlife Agencies (CDFW and USFWS) providing the Commission with our agencies' comments on the combined Draft Environmental Impact Report (DEIR) for Southern California Edison's proposed Valley-Ivyglen Subtransmission Line Project and the Alberhill System Project.

A hard copy will not follow unless specifically requested.

Sincerely,

James Thiede
Endangered Species Biologist
U.S. Fish and Wildlife Service
777 East Tahquitz Canyon Way, Suite 208
Palm Springs, California 92262
(760) 322-2070 x419 (Please note the new extension number - 419 instead of 219).

U.S. Fish and Wildlife Service
Palm Springs Fish and Wildlife Office
777 East Tahquitz Canyon Way, Suite 208
Palm Springs, California 92262
760-322-2070
FAX 760-322-4648

California Department of Fish and Wildlife
Inland Deserts Region
3602 Inland Empire Blvd., Suite C-220
Ontario, California 91764
909-484-0167
FAX 909-481-2945

In Reply Refer To:
FWS/CDFW-WRIV-16B0316-16CPA0338

July 15, 2016
Sent by email

California Public Utilities Commission
re: VIG / ASP
c/o Ecology and Environment, Inc.
505 Sansome Street, Suite 300
San Francisco, California 94111

Subject: Draft Combined EIR for the proposed Valley-Ivyglen Subtransmission Line Project and the Alberhill System Project, Riverside County, California

Dear Commission Staff:

The U.S. Fish and Wildlife Service (Service) and the California Department of Fish and Wildlife (Department), hereafter collectively referred to as the Wildlife Agencies, have reviewed the draft Environmental Impact Report (DEIR) for the proposed Valley-Ivyglen Subtransmission Line Project and the Alberhill System Project (Projects) received on June 9, 2016. The dual-project combined DEIR was prepared to identify the proposed Projects' direct, indirect, and cumulative environmental impacts; to discuss alternatives; and to propose mitigation measures that avoid, minimize, or offset significant environmental impacts.

The primary concern and mandate of the Service is the protection of public fish and wildlife resources and their habitats. The Service has legal responsibility for the welfare of migratory birds, anadromous fish, and endangered animals and plants occurring in the United States. The Service is also responsible for administering the Endangered Species Act of 1973 (Act), as amended (16 U.S.C. 1531 et seq.).

On June 22, 2004, the Service issued a section 10(a)(1)(B) permit for the Western Riverside County Multiple Species Habitat Conservation Plan. The Department issued NCCP Approval and Take Authorization for the Western Riverside County Multiple Species Habitat Conservation Plan (MSHCP) per Section 2800, et seq., of the California Fish and Game Code on June 22, 2004. The MSHCP established a multiple species conservation program to minimize and mitigate habitat loss and the incidental take of covered species in association with activities covered under the permit. The Department is responding to the DEIR as a Trustee Agency for fish and wildlife resources (California Fish and Game Code Sections 711.7 and 1802, and the California Environmental Quality Act [CEQA] Guidelines Section 15386), and as a Responsible Agency regarding any discretionary actions (CEQA Guidelines Section 15381), such as the issuance of a Lake or Streambed Alteration Agreement (California Fish and Game Code Sections 1600 *et seq.*) and/or a California Endangered Species Act (CESA) Permit for Incidental Take of Endangered, Threatened, and/or Candidate species (California Fish and Game Code Sections 2080 and 2080.1). The Department also administers the Natural Community Conservation Plan (NCCP) Program. The Wildlife Agencies are providing the following comments as they relate to the MSHCP and impacts to sensitive natural resources.

The Projects are being proposed by Southern California Edison (SCE) to meet long-term forecasted electrical demand in the proposed Projects' service area and to increase electrical system reliability. The Projects would include the following:

Alberhill Systems Project:

- One 1,120 megavolt ampere (MVA) 500/115-kilovolt (kV) substation to be named the "Alberhill Substation", expandable to a maximum of 1,680 MVA. The substation is proposed to be built on approximately 34 acres of a 124-acre property located northwest of the intersection of Temescal Canyon Road and Concordia Ranch Road in unincorporated western Riverside County.

- Two 500-kV transmission lines to connect the proposed Alberhill Substation to the existing Serrano-Valley 500-kV transmission line. The transmission lines (approximately 3.3 miles, combined) would connect the proposed Alberhill Substation to the existing Serrano-Valley 500-kV transmission line.

- Approximately 11.75 miles of new double-circuit 115-kV subtransmission lines and removal of 11 miles of existing single-circuit 115-kV subtransmission lines primarily in the existing ROW.

- Approximately 3 miles of single-circuit 115-kV subtransmission lines with distribution lines underbuilt on the subtransmission line structures and removal of about 3 miles of electrical distribution lines within the existing ROW.

- A second 115-kV circuit on approximately 6.5 miles of single-circuit 115-kV subtransmission lines (the single-circuit line is to be constructed as part of the proposed Valley– Ivyglen Project).

- Fiber optic lines overhead (9 miles) on sections of the new or modified subtransmission lines and underground (1 mile) in proximity to the proposed Alberhill Substation and several of the existing 115/12-kV substations.

- A 120-foot microwave antenna tower at the proposed Alberhill Substation site. As installed, the microwave antenna tower would direct signals to a new dish antenna located approximately 7 miles to the southwest at the existing Santiago Peak Communications site.

Valley-Ivyglen Subtransmission Line Project:

- One new, single-circuit 115-kV subtransmission line1 and fiber optic line. The route of the proposed Valley–Ivyglen Project would be approximately 27 miles long and constructed within approximately 23 miles of new right-of-way.
- Overhead fiber optic lines on the proposed structures and underground in new and existing

conduit.
- Transfer of existing distribution circuits along portions of the proposed subtransmission line to new 115-kV structures or to underground positions.
- New 115-kV switching and protective equipment at Valley and Ivyglen Substations.

The proposed facilities traverse the MSHCP Criteria Area and various species survey areas identified in MSHCP Sections 6.1.3 (Narrow Endemic Plant Species) and 6.3.2 (Species requiring Additional Surveys and Procedures). The Projects will affect MSHCP riparian/riverine resources, CDFW jurisdictional areas, and will potentially have significant impacts on multiple special-status species occurring within the Projects' respective footprints.

Wildlife Corridors and Conservation Areas

The DEIR briefly discusses potential impacts to wildlife movement/wildlife corridors and states that "the 115-kV subtransmission line would intersect [MSHCP] Proposed Linkages 1, 2 5, 6, and 19, Core 1, and Extension of Existing Core 2" (DEIR, 4.4-32). However, the DEIR focuses on direct, construction-related impacts, such as wildlife entrapment in trenches and habitat fragmentation due to vegetation removal. The Wildlife Agencies are concerned that the DEIR does not adequately identify and assess potential indirect impacts to proposed and existing wildlife corridors and MSHCP planned conservation areas ("Criteria Area") as a result of the ongoing and long-term operation of the Projects. For example, the proposed 34-acre Alberhill Substation will be situated directly adjacent to MSHCP Proposed Linkage 1 and Proposed Constrained Linkage 6, but the DEIR does not address the potential long-term effects of the operation of that facility on the viability of the proposed linkages. The DEIR should address potential impacts related to the ongoing and long-term operation of the Project, such as lighting, noise, and increased traffic, and propose specific minimization measures to ensure the MSHCP's proposed wildlife corridors are not affected. Other potential indirect effects that should be analyzed, and mitigation as appropriate, include, but are not limited to: the potential increase in unauthorized access to proposed conservation areas from SCE access roads, trash dumping along access roads in conservation areas, the introduction and spread of invasive species as a result of ongoing use of access roads, increase in fire risk, and the potential increase in depredation of special-status species by raptors and corvids through the installation of perch structures (transmission poles) in areas currently devoid of perches. In addition to measures already identified in the DEIR, mitigation measures could include gates and fencing to restrict access on new and existing roads, use of infrastrucure in conservation areas that is less likely to provide nesting substrate for raptors and corvids, and a maintenance plan for trash and invasive plant species management. Please provide a more detailed analysis of the Project's indirect impacts to proposed wildlife corridors and conservation areas with the identification of clear and enforceable mitigation measures to offset those impacts in the final EIR (FEIR).

Special-Status Natural Communities

Construction of the proposed Projects would have direct, permanent impacts on riparian habitat

and several special-status vegetation communities, including Chamise Chaparral, Coast Live Oak Woodland, Riversidean Sage Scrub, Southern Cottonwood-Willow Riparian Woodland, and Southern Sycamore-Alder Riparian Woodland. The DEIR also identified Riversidean Alluvial Fan Scrub within the Projects, which is considered a state-designated S-1.1 "very threatened" community, and as such, should be identified in the DEIR as a special-status natural community. The Wildlife Agencies also consider alkali wetland, grassland, and shrub communities on Willows-Traver-Domino soils on the floodplains of the San Jacinto River as special-status natural communities in urgent need of conservation. The DEIR acknowledges that direct, permanent impacts on special-status natural communities would result from the removal of vegetation for 115-kV installation and access road construction, and proposes to reduce impacts by limiting construction to designated areas, requiring preconstruction surveys and biological monitoring, and limiting the removal of native vegetation. However, the DEIR should provide compensatory mitigation, such as acquisition or conservation, where impacts to special-status communities are unavoidable. The Wildlife Agencies recommend the FEIR include measures to fully avoid and otherwise protect the special-status natural communities from project-related direct and indirect impacts, or provide specific and enforceable compensatory measures to offset the unavoidable impacts.

Impacts subject to Fish & Game Code Section 1602 and the MSHCP's Riparian/Riverine Policy

The DEIR identifies potential temporary and permanent impacts to wetlands, drainages, and riparian areas as a result of the implementation of the Projects. To reduce these potential impacts to less than significant, the DEIR proposes to implement Mitigation Measures BR-1, BR-2, BR-3, and BR-15, which would limit construction to designated areas and protect aquatic resources, require site-specific surveys, require biological monitoring, and control erosion, sedimentation, and input of pollutants. The Wildlife Agencies are not opposed to the proposed mitigation measures; however, we cannot agree that those measures reduce the Projects' impacts to "less than significant". The Wildlife Agencies request the FEIR include specific and enforceable compensatory measures to offset the permanent loss of Section 1602 and Riparian/Riverine resources, such as re-establishment, rehabilitation, or enhancement of similar habitats offsite, acquisition and conservation of similar habitats, or purchase of in-lieu fee or mitigation bank credits.

Proposed Impacts and Mitigation Measures

The Wildlife Agencies request minor adjustments to the wording of selected mitigation measures in the DEIR:

- MM BR-6

  DEIR Mitigation Measure BR-6 proposes to mitigate the Project's removal of native oak trees (*Quercus agrifolia*, an ecological keystone species) by planting replacement trees in the 15-gallon size at a 2:1 (replacement-to-removal) ratio. While we commend the commitment to replace native oak trees removed by project activities, we do not

recommend that 15-gallon specimens be used in the mitigation plantings. Wild coast live oak trees face a long and severe summer dry season, which they survive by tapping into the water table using deep roots. Specimens cultivated in pots or boxes experience a rapid loss of vigor in the root system by the time that they must be grown in 5-gallon pots or larger containers, and the plants are typically "root-bound" at this point, meaning that the roots are coiled around the inner perimeter of the container, tangled and meshed together, and typically growing sideways (sometimes even upward) rather than being oriented downward for deep growth. The result is that native oak trees in the 5-gallon size and larger sizes typically fail to develop extensive deep roots after planting, and then they must be supported permanently by heavy irrigation, perish from drought during the summer dry season, or remain permanently stunted and in poor health.

The Wildlife Agencies applaud Southern California Edison for being willing to bare the greater expense of larger replacement saplings. However, to improve the success of Measure BR-6, we recommend that the measure be adjusted to replace removed or otherwise impacted native oak trees by planting 1-gallon size replacement oaks at a 12:1 mitigation-to-impact ratio. Over several decades of future tree growth, this should result in the maintenance or a gain in the number of native oak trees onsite (after allowing for some mortalities of planted trees due to droughts and herbivory by gophers and squirrels).

We request the MM BR-6 be modified as follows: "If the applicant cannot feasibly relocate oak trees that are removed, 1-gallon oak trees shall be planted at a 12:1 ratio within the appropriate habitat to replace removed trees. These replacement trees shall be indigenous coast live oak trees …The applicant shall be responsible for monitoring and maintaining the relocated and replacement trees for a minimum of two years (to include at least two complete California rainy seasons, here defined as the period of the year from November – May).

To evaluate whether or not this type of mitigation is successful over the long-term, the relocated oak trees and replacement oaks will be revisited by a certified arborist in the fifth, tenth, and fifteenth years after relocation or planting to assess the survival/mortality rate of these oaks, and to evaluate the health of the surviving individuals. The applicant will prepare an initial report on the implementation of this measure after the second year of monitoring and maintenance has been completed. A Final Report will be prepared after the Year-15 assessment has been carried out; the Final Report will be submitted to the CPUC, and copies shall be sent to the USFWS (Palm Springs Fish and Wildlife Office), to the CDFW (Inland/Deserts Regional Office in Ontario, California), and to the California Native Plant Society's Conservation Program staff."

- <u>MM BR-7: Habitat Restoration and Revegetation Plan Requirements</u>

  Much of strategy to reduce the two Projects' effects to the level identified in the DEIR as "less than significant after mitigation" for the lengthy list of special-status species and natural communities occurring in the Projects' respective footprints and alignments

depends on to-be-developed Habitat Restoration and Revegetation Plan (HRRP). Since some of the species affected are listed as threatened, endangered, or Fully Protected by either the Department, the Service, or both, the Wildlife Agencies request that the final sentence of MM BR-7 be adjusted to read as follows:

"A copy of the final Habitat Restoration and Revegetation Plan, along with documentation of agency review and incorporation of comments into the final version, shall be provided to the CPUC, the USFWS, and the CDFW for approval prior to the CPUC issuing a Notice to Proceed."

- BR-8: Special-Status Plant Species Avoidance and Mitigation Measures

  Since some of the species affected are listed as threatened or endangered by the Service, the Wildlife Agencies request that the phrase "…shall develop and implement a transplantation plan in coordination with the appropriate agencies (CDFW, RCA)" be amended to include the Service. Thus, the parenthesis at the end of that sentence would then read as follows: "(CDFW, USFWS, RCA)."

- Impact BR-6 (VIG) (p. 4.4-34):

  Determinations of Biologically Equivalent or Superior Preservation (DBESPs) prepared pursuant to the MSHCP must be provided to the Wildlife Agencies for review and comment. A DBESP must also be included in the Joint Project Review package and reviewed by the RCA if the project occurs within the MSHCP Criteria Area.

  The Wildlife Agencies request that the wording of the first sentence on page 4.4-34 be amended accordingly.

- Quino Checkerspot Butterfly

  Suitable habitat for the Quino checkerspot butterfly (checkerspot) consists of open shrubland dominated by native forbs and containing native plantago species. This natural community was widespread prior to European settlement, but has now become rare and patchily distributed in the checkerspot's range. The DEIR concludes that "construction of the proposed project is not anticipated to impact Quino checkerspot butterflies" because no Quino checkerspots or their larvae were found during the 2009 Quino survey. However, the DEIR acknowledges that "Quino checkerspot butterfly habitat exists … in the southeastern portion of the substation footprint and within the central portion of the Import Soil Source Area."

  The federally endangered Quino checkerspot butterfly (*Euphydryas editha quino*) is a species which exhibits "meta-population dynamics"; that is, it has a patchy distribution wherein the patches of suitable habitat distributed across its range are subject to a continually shifting pattern of local butterfly extirpation and recolonization events over

the long term. Since the number and distribution of this taxon's suitable habitat patches are quite limited, the permanent loss of any patch contributes significantly toward pushing this endangered species closer to extinction. Therefore, even if those patches are presently unoccupied, the destruction of two patches of suitable habitat by the Projects must be considered a significant effect.

We request that, if at all possible, the Projects avoid the portions of the two properties mentioned, above, which contain Quino checkerspot habitat. If further investigation determines that the proposed Alberhill Substation and the proposed soil source area cannot be adjusted to avoid the portions containing Quino checkerspot habitat, then the project proponent should contact the Wildlife Agencies for assistance in developing appropriate compensatory mitigation measures.

The Projects' respective alignments or footprints are within the MSHCP Plan Area. This is acknowledged in the DEIR and reference is made to the applicant becoming an MSHCP Participating Special Entity. Under the terms of the MSHCP Participating Special Entities participate in the MSHCP by carrying out proposed projects in a manner consistent with MSHCP policies and procedures and contributing funds for land acquisition and management and monitoring. Proposed projects are specifically identified and become MSHCP covered activities with incidental take authorization conveyed via a certificate of inclusion. The applicant's participation in the Participating Special Entity process for the Projects would address most or all of our comments.

We appreciate the opportunity to comment on this DEIR. If you have any questions or comments regarding this letter, or to schedule a meeting or a discussion of mitigation options, please contact Kim Freeburn of the Department at (909) 945-3484, or Jim Thiede of the Service at (760) 322-2070, extension 419.

Sincerely,



for
Kennon A. Corey
Assistant Field Supervisor
U.S. Fish and Wildlife Service

Leslie MacNair
Regional Manager
California Department of Fish and Wildlife

cc:
Charles Landry, Regional Conservation Authority
Jeff Brandt, California Department of Fish and Wildlife

U.S. Department of Homeland Security
FEMA Region IX
1111 Broadway, Suite 1200
Oakland, CA. 94607-4052

FEMA

April 26, 2016

California Public Utilities Commission
Re VIG/ASP c/o Ecology and Environmental, Inc.
505 Sansome Street, Suite 300
San Francisco, California 94111

To California Public Utilities Commission:

This is in response to your request for comments regarding the State of California Public Utilities Commission's Notice of Availability, Southern California Edison Valley Ivyglen Submission Line Project and Alberhill System Project Draft Environmental Impact Report.

Please review the current effective countywide Flood Insurance Rate Maps (FIRMs) for the County of Riverside (Community Number 060245), Maps revised August 18, 2014 and City of Lake Elsinore (Community Number 060636), Maps revised August 28, 2008. Please note that the City of Lake Elsinore, Riverside County, California is a participant in the National Flood Insurance Program (NFIP). The minimum, basic NFIP floodplain management building requirements are described in Vol. 44 Code of Federal Regulations (44 CFR), Sections 59 through 65.

A summary of these NFIP floodplain management building requirements are as follows:

- All buildings constructed within a riverine floodplain, (i.e., Flood Zones A, AO, AH, AE, and A1 through A30 as delineated on the FIRM), must be elevated so that the lowest floor is at or above the Base Flood Elevation level in accordance with the effective Flood Insurance Rate Map.

- If the area of construction is located within a Regulatory Floodway as delineated on the FIRM, any ***development*** must not increase base flood elevation levels. **The term *development* means any man-made change to improved or unimproved real estate, including but not limited to buildings, other structures, mining, dredging, filling, grading, paving, excavation or drilling operations, and storage of equipment or materials.** A hydrologic and hydraulic analysis must be performed *prior* to the start of development, and must demonstrate that the development would not cause any rise in base flood levels. No rise is permitted within regulatory floodways.

- Upon completion of any development that changes existing Special Flood Hazard Areas, the NFIP directs all participating communities to submit the appropriate hydrologic and hydraulic data to FEMA for a FIRM revision. In accordance with 44 CFR, Section 65.3, as soon as practicable, but not later than six months after such data becomes available, a community shall notify FEMA of the changes by submitting technical data for a flood map revision. To obtain copies of FEMA's Flood Map Revision Application Packages, please refer to the FEMA website at http://www.fema.gov/business/nfip/forms.shtm.

Please Note:

Many NFIP participating communities have adopted floodplain management building requirements which are more restrictive than the minimum federal standards described in 44 CFR. Please contact the local community's floodplain manager for more information on local floodplain management building requirements. The Lake Elsinore floodplain manager can be reached by calling Rita Thompson, Senior Engineering Technician, at (951) 674-3124. The Riverside County floodplain manager can be reached by calling Deborah de Chambeau, Senior Civil Engineer, at (951) 955-1265.

If you have any questions or concerns, please do not hesitate to call Frank Mansell of the Mitigation staff at (510) 627-7191.

Sincerely,

Gregor Blackburn, CFM, Branch Chief
Floodplain Management and Insurance Branch

cc:
Rita Thompson, Senior Engineering Technician, City of Lake Elsinore
Deborah de Chambeau, Senior Civil Engineer, Riverside County
Garret Tam Sing/Salomon Miranda, State of California, Department of Water Resources, Southern Region Office
Frank Mansell, NFIP Planner, DHS/FEMA Region IX
Alessandro Amaglio, Environmental Officer, DHS/FEMA Region IX

State Agencies

Midbust, Jessica

From: Johl, Balbir@CalOES <Balbir.Johl@CalOES.ca.gov>
Sent: Thursday, July 14, 2016 4:22 PM
To: VIG/ASP
Cc: Johl, Balbir@CalOES; Macrae, Mark@CalOES
Subject: Valley-Ivyglen and Alberhill Projects

To Whom it May Concern,

The Governor's Office of Emergency Services, Public Safety Communications (PSC) would like to comment on the Valley-Ivyglen and Alberhill Projects. The concern that PSC has is stated below.

1. Will the microwave tower with the associated antennas/frequencies generate interfering Radio Frequency (RF) signals. We are requesting that the owner of the microwave tower publish the frequencies to be used at the Alberhill Substation and perform an associated RF intermodulation study.

2. That a radio spectrum study be performed to determine which of the Public Safety radio bands will receive interference from the substation or substations and what RF signals are being generated by the high voltage lines.

If there are any questions regarding the above comments, please let me know.

Balbir Johl
Senior Telecommunications Engineer
Governor's Office of Emergency Services
Public Safety Communications
balbir.johl@caloes.ca.gov
916-657-6131

Freeman, Emma

From: Lukins, Chloe <chloe.lukins@cpuc.ca.gov>
Sent: Wednesday, July 20, 2016 5:10 PM
To: VIG/ASP
Cc: Uchida, Jensen; Obiora, Noel
Subject: SCE Alberhill Ivyglen Systems (A.09-09-022) - comments on the Draft Environmental Impact Report (DEIR)
Attachments: [Untitled].pdf

Follow Up Flag: Follow up
Flag Status: Completed

Attached are ORA's comments on the DEIR.

Thanks.

From: Lukins, Chloe
Sent: Monday, July 18, 2016 9:42 AM
To: 'VIG.ASP@ene.com'
Cc: 'JMU@cpuc.ca.gov'; Obiora, Noel
Subject: SCE Alberhill Ivyglen Systems (A.09-09-022) - comments on the Draft Environmental Impact Report (DEIR)

Hello,

ORA would like request a short extension of the time to file comments for Alberhill Ivyglen DEIR. We would like to use the time to verify certain facts regarding our proposed alternatives that were not fully analyzed or included in the DEIR. We request to submit comments on Wednesday, July 20.

Thanks,
Chloe

Chloe Lukins, P.E.
Program Manager
Office of Ratepayer Advocates
California Public Utilities Commission
505 Van Ness Avenue, Room 4102
San Francisco, CA 94102
Office: 415.703.1637
Chloe.Lukins@cpuc.ca.gov

ORA

Office of Ratepayer Advocates
California Public Utilities Commission

505 Van Ness Avenue
San Francisco, California 94102

http://ora.ca.gov

July 20, 2016

California Public Utilities Commission
RE: VIG/ASP
c/o Ecology and Environment, Inc.
505 Sansome Street, Suite #300
San Francisco, CA 94111

Subject: Office of Ratepayer Advocates Comments on the Draft Environmental Impact Report Issued Regarding the Alberhill System Project and Valley-Ivyglen Project.

Reference: Draft Environmental Impact Report, SCH Nos. 2008011082 and 2010041031, California Public Utilities Commission Proceeding Applications 07-01-031 and 09-09-022.

I. Background

The following describes the system configuration of Southern California Edison Company's service area that is affected by the proposed Alberhill System Project (ASP) and Valley-Ivyglen Project (VIG). SCE's Valley Substation is a 500 kilovolt (kV) substation, which serves both the Valley North and Valley South service areas. There are five transformers that transfer power from a 500 kV bus bar to a three-section 115 kV bus bar, namely the AB-Section that serves power demand in the Valley North area; the D-Section that serves power demand in the Valley South area; and a C-Section that serves as back-up for both the AB-Section and the D-Section. (See Figure 1)

ORA recommends five alternatives (see Section III) that the final Environmental Impact Report (EIR) should fully evaluate because these alternatives appear to be more cost effective and less environmentally impactful compared to the Proposed Projects. Three of ORA's recommended alternatives were mentioned in the Draft EIR (DEIR) and two alternatives were not mentioned at all.

II. SCE Applications and Commission Decisions

In January 2007, SCE filed Application (A.) 07-01-031 for a Permit to Construct (PTC) the Valley-Ivyglen (VIG) project. The proposed VIG project consists of 27 miles of 115 kV transmission line to interconnect the Valley Substation and the Ivyglen Substation.

In September 2009, SCE filed A. 09-09-022 for a Certificate of Public Convenience and Necessity (CPCN) to construct the Alberhill System Project (ASP). The ASP consists of the Alberhill 500 kV Substation, 3.3 miles of 500 kV transmission lines to loop in the Alberhill Substation to the Valley-Serrano 500 kV transmission line, and the new and modified 115-kV transmission lines. (See Figure 2)

Figure 1: Existing Valley Substation

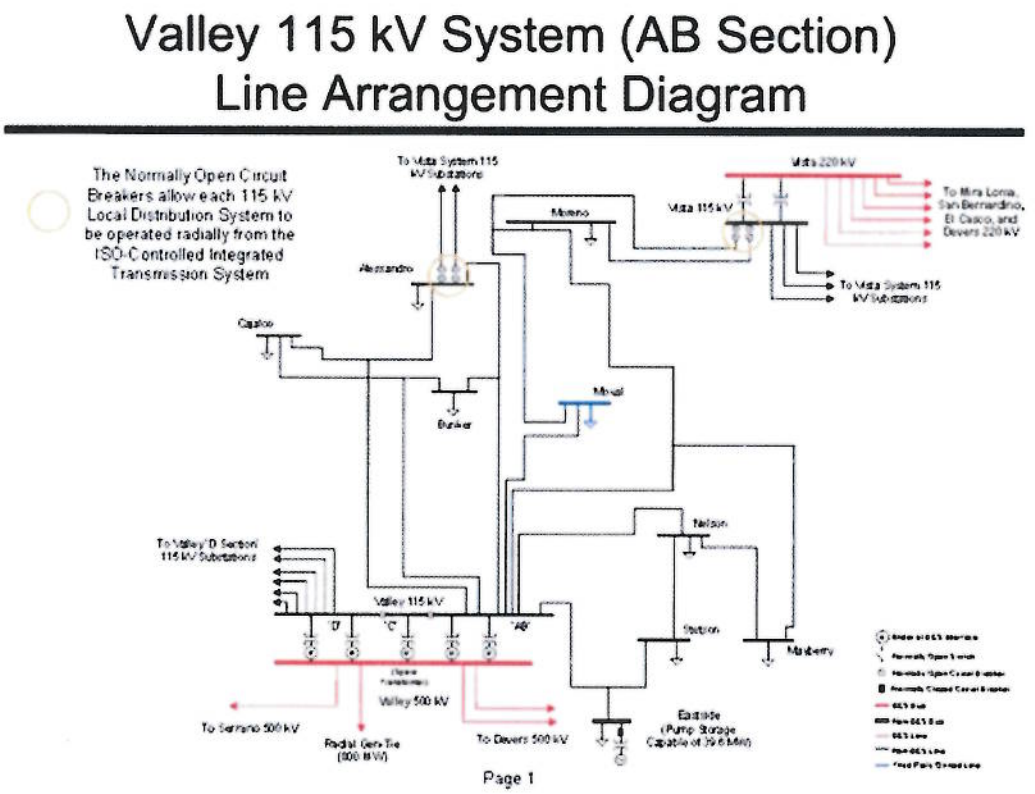

Figure 2: SCE Proposed Projects

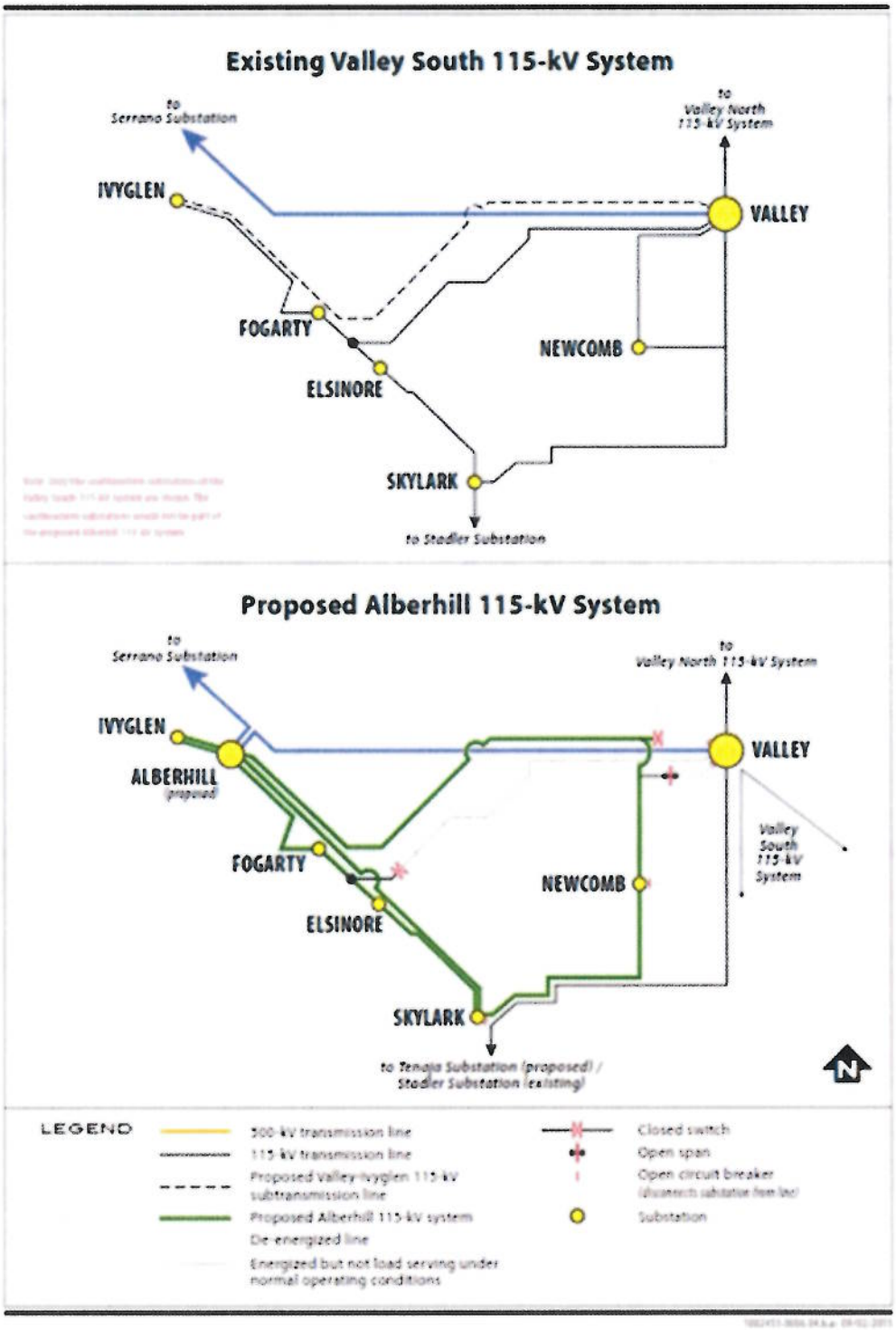

Figure 2-3

Technical Schematic of Existing and Proposed Systems

Alberhill and Valley-Ivyglen Projects

Riverside County, California

In August 2010, the Commission issued Decision (D.) 10-08-009 and granted, among other things, A. 07-01-031 for the VIG project. However, SCE filed a petition for modification of D.10-08-009 in April 2013, and in May 2014, SCE amended its Petition to modify D.10-08-009. Considering that both the VIG and the ASP projects are in the same geographic area and electrically related to each other, the Commission consolidated the CEQA processes for the two projects.

In April 2016, Energy Division issued a Draft Environmental Impact Report (DEIR) on VIG and ASP (Proposed Projects).

III. Office of Ratepayer Advocates' Comments to the Draft EIR

The Office of Ratepayer Advocates (ORA) is continuing its analysis of SCE's Proposed Projects at this time. ORA's review of the DEIR on the Proposed Projects, VIG and ASP, leads to the conclusion that the DEIR does not sufficiently consider project alternatives that would minimize environmental impact and require less capital investment for the ASP. Therefore, ORA has identified the following project alternatives for the ASP, which have not been sufficiently explored in the DEIR. The following are ORA's suggested alternatives to be evaluated:

1. No project alternative;
2. Divide Valley South System into Two Systems;
3. Install a New Transformer at the Valley Substation;
4. Interconnect the Inland Empire Energy Center to the 115 kV Bus at the Valley Substation;
5. Loop-in SDG&E's 230 kV Escondido-Talega Transmission Line to SCE's Upgraded Moraga Substation.

Alternatives 1, 3 and 4 were mentioned in the DEIR. ORA is recommending that the electrical improvements and the environmental impacts in these alternatives be fully evaluated. These alternatives appear to be more cost effective and less environmentally impactful compared to the Proposed Projects.

1. No-Project Alternative (See Figure 3)

SCE stated that the C-Section transformer at the Valley Substation operates "as a spare transformer … during emergency or maintenance conditions." Accordingly, SCE currently sets the circuit breaker between the C-Section and the D-Section at "normal open" position. From an electrical prospective, the C-Section transformer is able to mitigate over loading of AB-Section or D-Section transformers. Therefore, ORA proposes that SCE modify its planning approach and operating procedures so that the circuit breaker may be closed when the D-Section transformers are to be overloaded. In parallel with the two D-Section transformers, the C-Section transformer will be able to provide additional power transfer capability and mitigate potential overload conditions on D-Section transformers. Under this approach, SCE is able to elect when to perform

transformer maintenance. This is a No-Project alternative because it includes changes to circuit breaker settings and operating procedures only, with no environmental impact and no additional capital cost.

Figure 3: No Project Alternative

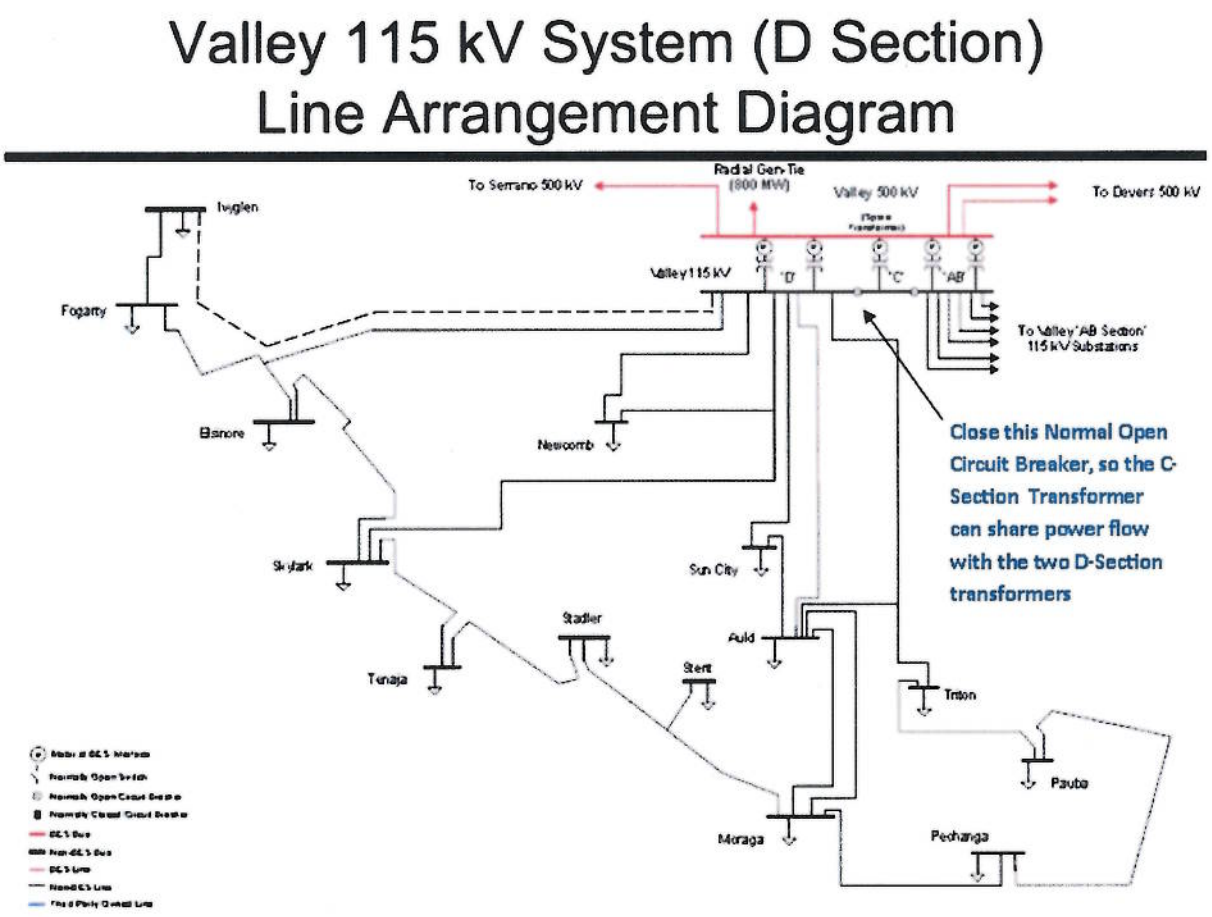

The DEIR makes a reference to ORA's recommendation in its No Project Alternative section but only as an "event anticipated with respect to the proposed Alberhill Project" if operation and construction of ASP does not occur[1]. Specifically, the DEIR states:

> *"The stand-by spare 560-megawatt ampere 500/115kV transformer, which was installed at the Valley Substation in 2011 to provide back-up transformer capacity in the event of transformer failure at Valley Substation, may be put into service."* [2]

[1] DEIR,¶ 3.4.5.2, p.3-12.
[2] Id.

ORA's recommendation is that the Commission fully evaluates this option as a competing alternative.

2. Divide Valley South System into Two Systems

SCE can also divide the Valley South 115 kV system into two systems so that one system is supplied by the D-Section transformers and the other is supplied by the C-Section transformer. (See Figure 4)

Figure 4: Divide Valley South System into Two Parts

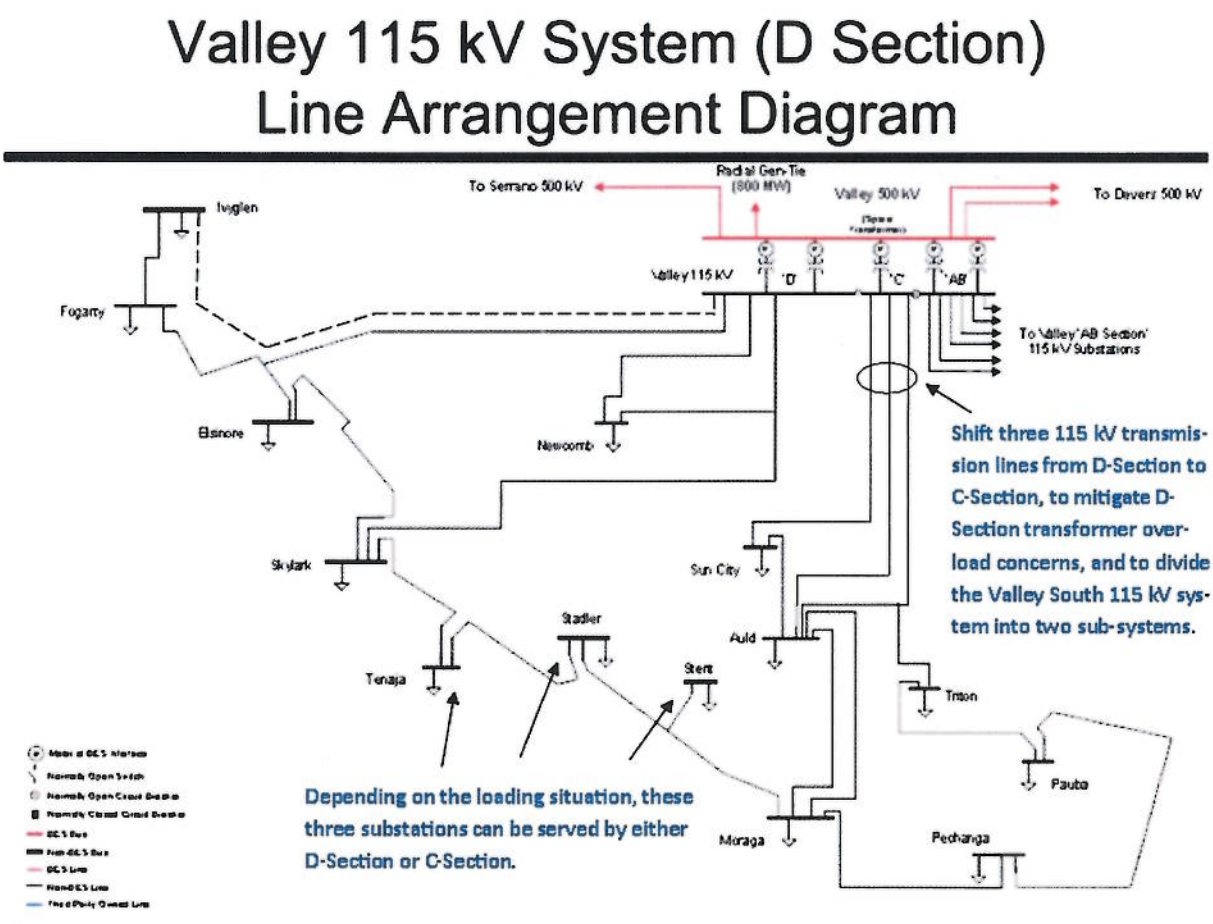

Under this alternative, the three 115 kV transmission lines located to the far right of D-Section can be shifted from D-Section to C-Section, so the Valley South 115 kV system is divided into two systems, with one system being served by the D-Section transformers and the other system being served by the C-Section transformer. Depending on the loading situation of the D-Section transformers and the C-Section transformer, SCE could decide whether Tenaja, Stadler, and Stert substations should be served by the D-Section or C-Section. In addition, the transmission lines connecting these three substations can also act as a system tie between the D-Section System and

the C-Section System. Under this arrangement, the three 115 kV sections (AB, C, and D) can coordinate with each other during emergency and maintenance outages.

3. Install a New Transformer at the Valley Substation

SCE could install a new transformer on the D-Section to mitigate potential transformer overloading under future load growth scenarios. Installing a new transformer would have a lower environmental impact and would cost less than the Proposed Projects. (See Figure 5)

Figure 5: Install a new 500/115 kV Transformer

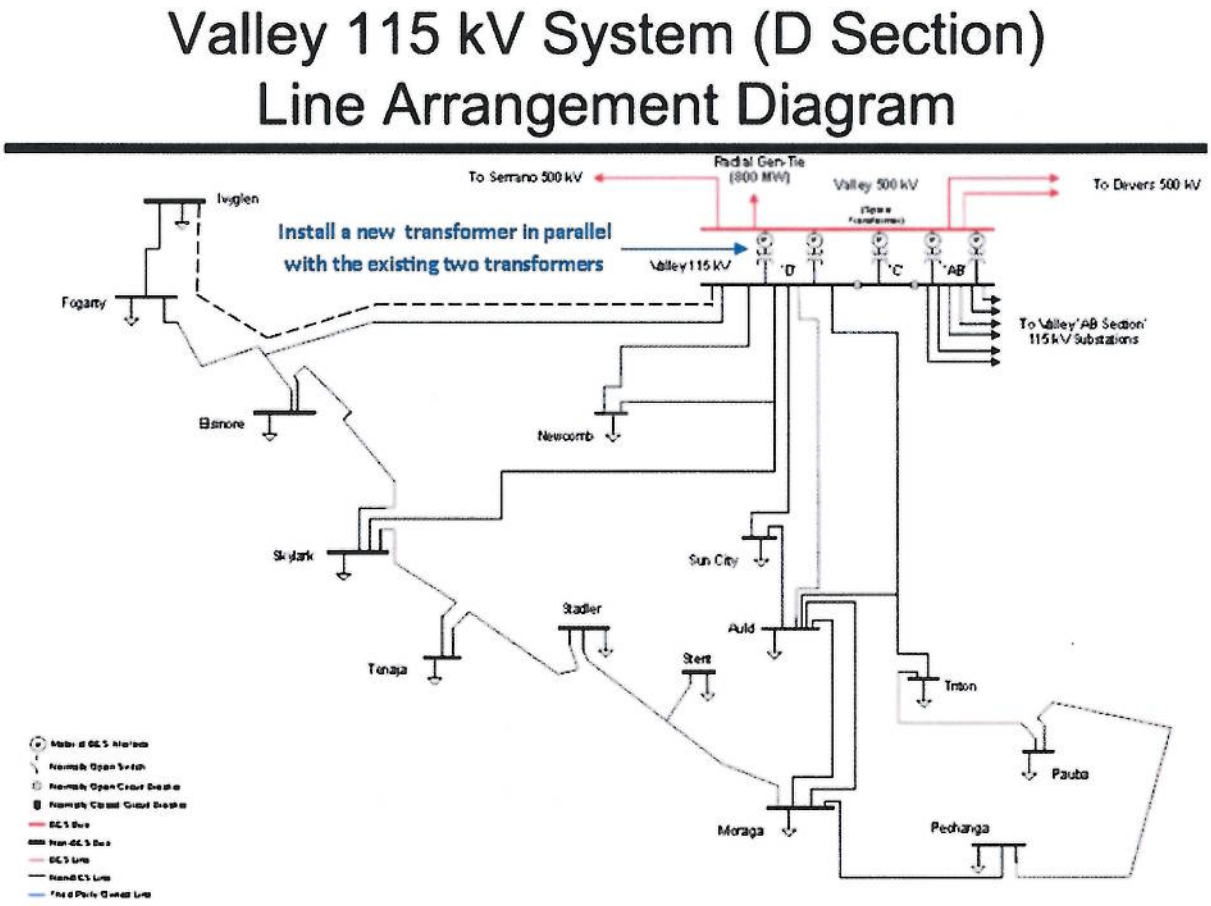

The DEIR stated that "This alternative would relieve projected electrical demand but would not include a new 500/115-kV substation within the ENA [Electric Need Area] or maintain system ties between a new 115-kV system and the Valley South 115-kV System." The DEIR did not explain why one 500/115kV might be insufficient to service 1,260 square miles and 325,000 customers, did not provide analysis on using the IEEC switchyard as a separate power supply

source, and did not consider the fact that Vista Substation is the backup power supply source to the area.

4. Interconnect the Inland Empire Energy Center to the 115 kV Bus at the Valley Substation

The Inland Empire Energy Center (IEEC) is a local generator within the *San Jacinto Region* with a capacity of 800 mega-watts (MW). The power is stepped up from 19.5 kV to 500 kV and then interconnected to the 500 kV bus of the Valley Substation. The IEEC is approximately 0.5 miles west of Valley Substation[3] and the IEEC power supply can be used to serve the Valley South area demand. Based on the existing electrical configuration, the output from the IEEC is (1) stepped up from 19.5 kV to 500 kV, (2) delivered to the Valley 500 kV bus, (3) stepped down to the Valley 115 kV bus, and (4) then delivered to the Valley South area. This configuration exacerbates the transmission congestion on the 500 kV bus, the two D-Section transformers, and the D-Section 115 kV bus, because the 800 MW of power supply is unnecessarily constraining the power transfer capability of the transmission lines and transformers it flows through.

The DEIR stated that "the IEEC interconnection to Valley Substation would require an additional transformer at Valley Substation to step down the electricity generated at the IEEC from 500 to 115 kV." So the DEIR combined the Additional Valley South Transformer Alternative with the IEEC Interconnection Alternative.[4] ORA's analysis concludes that it does not make engineering sense to step up the IEEC power to 500 kV and then to step down to 115 kV to serve local demand.

ORA proposes to step up the IEEC generation output to 115 kV and to interconnect the IEEC power plant directly to the Valley 115 kV D-Section. With this alternative, the power flow on the 500 kV bus and the two D-Section transformers would be significantly reduced, so there would be no overloading issues and no need to install another 500/115 kV transformer at Valley Substation. This reconfiguration would also have additional benefit of reducing transmission losses, because the power would not need to be stepped-up and stepped-down through those transformers before it is delivered to the Valley South area. This alternative would have a lower environmental impact and would be less capital-intensive than the Proposed Projects. (See Figure 6 below)

[3] DEIR Appendix D at 34.
[4] Draft EIR Appendix D, at page 34.

Figure 6: Reconfigure the Interconnection of the IEEC Power Plant

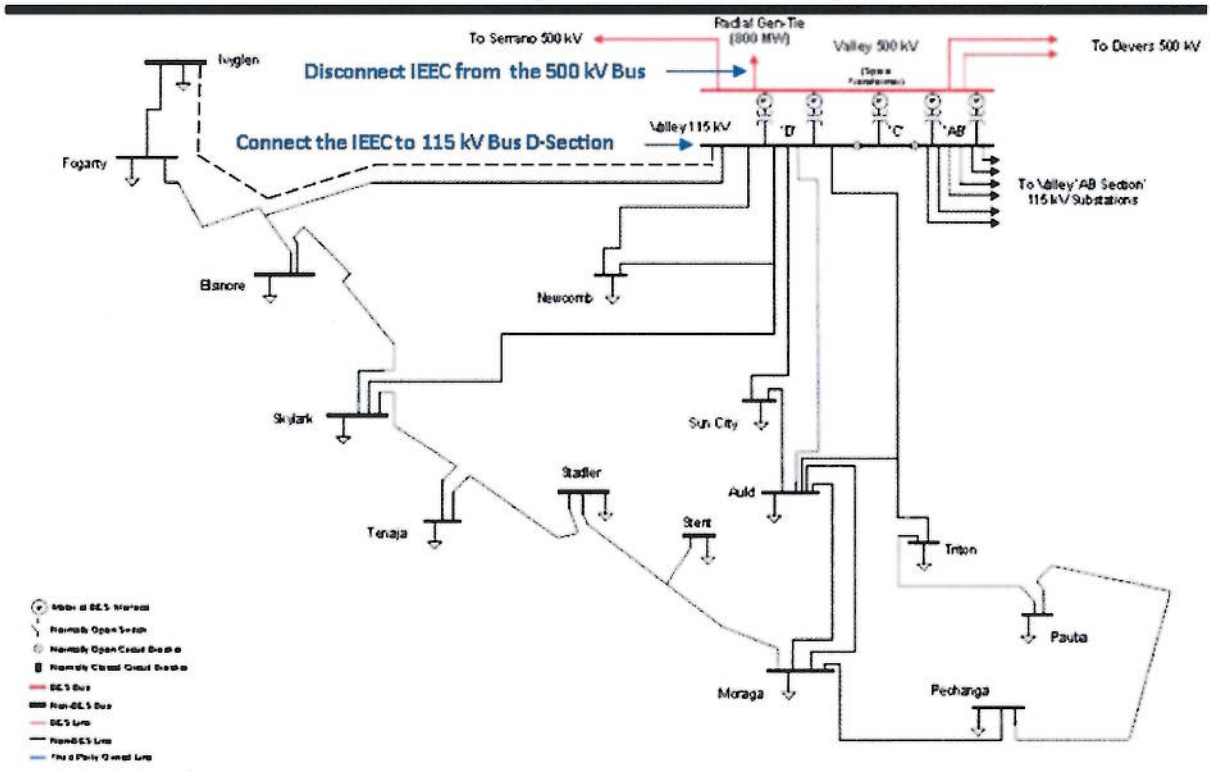

The DEIR does not consider the option of using the IEEC as an alternative to the ASP, but claims that if the ASP is not constructed, the "Valley Substation would continue to be the only 500/115kV substation serving electrical demand in the *San Jancinto Region* of southwestern Riverside County—an area encompassing roughly 1,260 square miles and serving approximately 325,000 metered customers."[5] The DEIR did not explain why one 500/115kV might be insufficient to service 1,260 square miles and 325,000 customers, did not provide analysis on using the IEEC switchyard as a separate power supply source, and did not consider the fact that Vista Substation is the backup power supply source to the area.

[5] DEIR at 3-12.

5. **Loop-in SDG&E's 230 kV Escondido-Talega Transmission Line to SCE's Upgraded Moraga Substation (See Figure 7)**

Figure 7: Loop in Talega—Escondido 230 kV Line to Upgraded Moraga

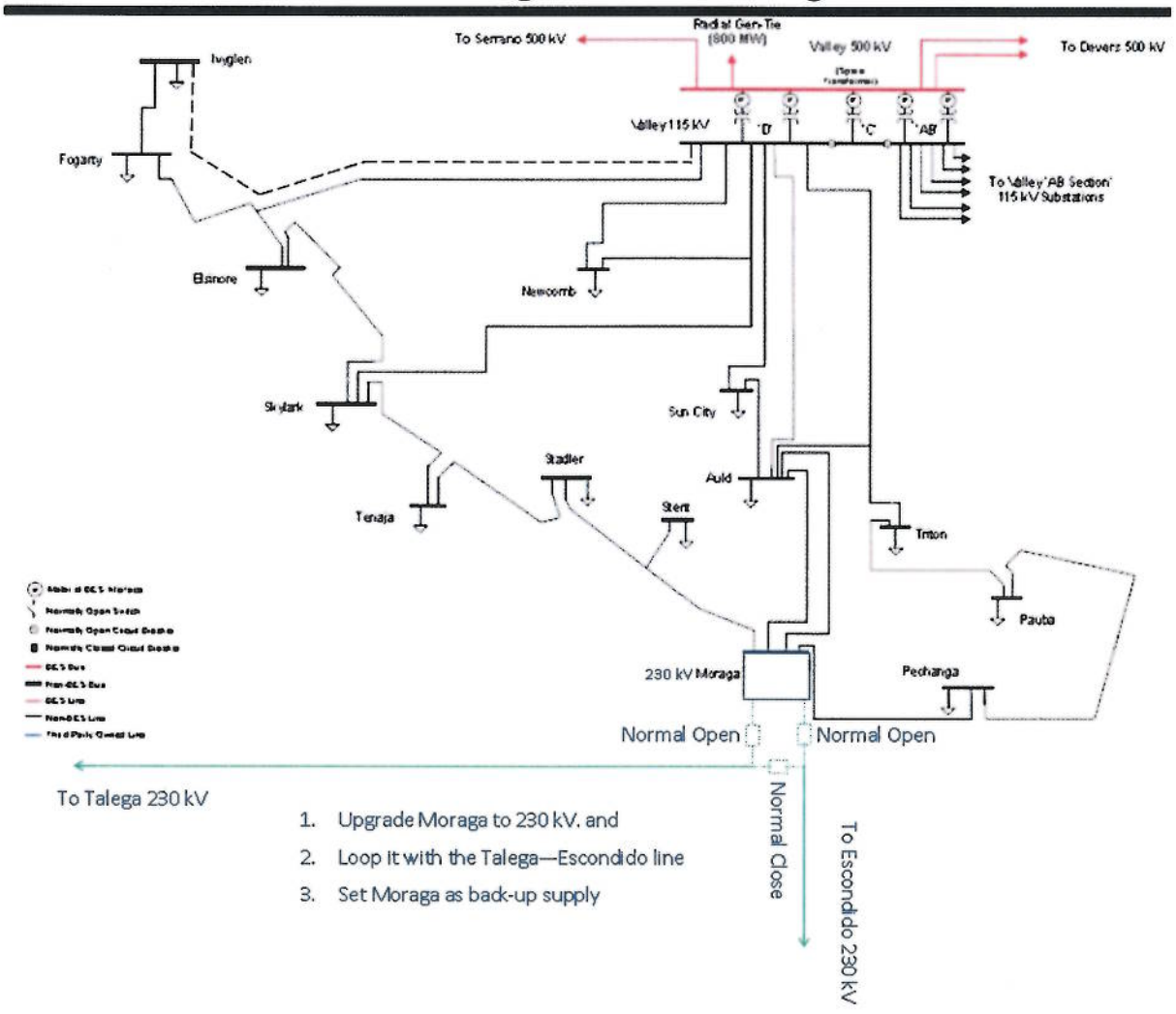

ORA believes that SCE could also upgrade the Moraga Substation to 230 kV, then loop it with SDG&E's Escondido—Talega 230 kV transmission line at Interstate 15. Such a loop-in would reduce the power flow on Valley Substation D-Section transformers and provide power supply flexibility and reliability to the Valley South area. This approach is similar to that for the Valley

North area, which uses the 220kV Vista Substation as back up supply to the Valley North area when Valley AB-Section is not available. ORA's initial review indicates that new 230 kV transmission lines needed to loop in the Moraga Substation would be approximately 5.5 miles long. There are four 115 kV transmission lines from the Moraga Substation to serve other substations within the Valley South area. Compared to the Proposed Projects, this alternative will be environmentally superior and more economical because this alternative would eliminate the 500 kV Alberhill Substation, the approximately 3.3 miles of 500 kV double circuit transmission line to loop in the Alberhill Substation, and other modified and new 115 kV transmission lines.

IV. Conclusion

ORA recommends evaluation of the above mentioned five alternatives.

/s/ Charles Mee, P.E.

Charles Mee, P.E.
Senior Utilities Engineer – Specialist
charles.mee@cpuc.ca.gov

Freeman, Emma

From: Anna Hoover <ahoover@pechanga-nsn.gov>
Sent: Friday, July 15, 2016 6:47 PM
To: VIG/ASP
Cc: Ebru Ozdil; Andrea Fernandez
Subject: Pechanga Tribe Comments on the DEIR for Valley-Ivyglen Substation
Attachments: Pechanga Cmnts NOP Ivyglen-Fogarty Substation DEIR 7.15.16.pdf

To Whom It May Concern;

Electronically attached are the Pechanga Tribe's comments regarding the above named project. Please respond to this e-mail for confirmation of receipt. A hard copy will also follow via USPS.

Please do not hesitate to contact me at 951-770-8104 or ahoover@pechanga-nsn.gov should the attachment not open or if you have any questions or comments.

Respectfully,

Anna M. Hoover
Cultural Analyst/Assistant THPO
Pechanga Band of Luiseno Indians
P.O. Box 2183
Temecula, CA 92593

951-770-8104 (O)
951-694-0446 (F)
951-757-6139 (C)
ahoover@pechanga-nsn.gov

This message, and any documents or files attached to it contains confidential information and may be legally privileged. Recipients should not file copies of this message and/or attachments with publicly accessible records. If you are not the intended recipient or authorized agent for the intended recipient, you have received this message and attachments in error, and any review, dissemination, or reproduction is strictly prohibited. If you are not the intended recipient, please immediately notify me by reply email or by telephone at (951) 770-8104, and destroy the original transmission and its attachments without reading them or saving them.

First Nations

Native American Tribes

PECHANGA CULTURAL RESOURCES
Temecula Band of Luiseño Mission Indians

Post Office. Box 2183 • Temecula, CA 92593
Telephone (951) 308-9295 • Fax (951) 506-9491

Chairperson:
Neal Ibanez

Vice Chairperson:
Bridgett Barcello

Committee Members:
Mary Bear Magee
Evie Gerber
Darlene Miranda
Richard B. Scearce, III
Michael Vasquez

Director:
Gary DuBois

Coordinator:
Paul Macarro

Planning Specialist:
Tuba Ebru Ozdil

Cultural Analyst:
Anna Hoover

July 15, 2016

VIA E-MAIL and USPS

California Public Utilities Commission
RE: VIG/ASP
c/o Ecology and Environment, Inc.
505 Sansome Street, Suite #300
San Francisco, CA 94111

Re: Pechanga Tribe Comments on the Draft Environmental Impact Report for the Valley-Ivyglen Subtransmission Line Project and Alberhill System Project Draft EIR

To Whom It May Concern:

This comment letter is written on behalf of the Pechanga Band of Luiseño Indians (hereinafter, "the Tribe"), a federally recognized Indian tribe and sovereign government. The Tribe formally requests, pursuant to Public Resources Code §21092.2, to be notified and involved in the entire CEQA environmental review process for the duration of the above referenced project (the "Project"). If you have not done so already, please add the Tribe to your distribution list(s) for public notices and circulation of all documents, including environmental review documents, archeological reports, and all documents pertaining to this Project. The Tribe further requests to be directly notified of all public hearings and scheduled approvals concerning this Project. Please also incorporate these comments into the record of approval for this Project.

The Tribe submits these comments concerning the Project's potential impacts to cultural resources in conjunction with the environmental review of the Project. The Tribe has previously submitted multiple comments and consulted directly with the California Public Utilities Commission (CPUC) on the sensitivity of the Project and the Traditional Cultural Properties (TCPs) that the Project will be affecting, as documented in the Draft Environmental Impact Report (DEIR). After review of the proposed mitigation measures, Pechanga is disappointed in the lack of Tribal involvement in almost all aspects of the proposed mitigation, including preparation of the Cultural Resources Monitoring and Treatment Plan (CRMTP) and associated documents, participation in Project Commitment B: Worker Environmental Awareness Plan (WEAP) program and in the evaluation/eligibility determination of the cultural sites. Additionally, although the DEIR acknowledges that there are TCPs within the Project boundaries, there is no mitigation proposed to reduce the level of significance. Finally, the Pechanga Cultural Resources Department, including the monitoring program, has been formally organized since 1999, with tribal monitoring occurring for several decades before then. Our

tribal monitors are professionally trained and conduct a necessary service as they are responsible for identifying and trying to preserve as much of People, including their places and things, that once lived in this area. While the Tribe appreciates the opportunity to monitor projects within its ancestral territory, compensation should be offered for the professional service provided. Given the sensitivity of the Project area, it is the position of the Pechanga Tribe that Pechanga tribal monitors should be required to be present during all ground-disturbing activities conducted in connection with the Project, including any additional archeological excavations performed.

THE CPUC MUST INCLUDE INVOLVEMENT OF AND CONSULTATION WITH THE PECHANGA TRIBE IN ITS ENVIRONMENTAL REVIEW PROCESS

It has been the intent of the Federal Government[1] and the State of California[2] that Indian tribes be consulted with regard to issues which impact cultural and spiritual resources, as well as other governmental concerns. The responsibility to consult with Indian tribes stems from the unique government-to-government relationship between the United States and Indian tribes. This arises when tribal interests are affected by the actions of governmental agencies and departments. In this case, it is undisputed that the project lies within the Pechanga Tribe's traditional territory. Therefore, in order to comply with CEQA and other applicable Federal and California law, it is imperative that the California Public Resources Commission consult with the Tribe in order to guarantee an adequate knowledge base for an appropriate evaluation of the Project effects, as well as generating adequate mitigation measures.

Additionally, the DEIR does not mention AB 52 in Section 4.5.2 Regulatory Setting and Subsection 4.5.2.2 State. As you know, effective July 1, 2015, CEQA was amended to include an entirely new category of resources, "Tribal Cultural Resources." The report only cites to the CEQA Guidelines provisions regarding the significance of impacts to archaeological and historical resources, while failing to mention this new category of resources. In order to accurately reflect the regulatory framework, the DEIR should be updated to include reference to these changes in the law.

PECHANGA CULTURAL AFFILIATION TO PROJECT AREA

The Pechanga Tribe asserts that the Project area is part of Luiseño, and therefore the Tribe's, aboriginal territory as evidenced by the existence of named places, *tóota yixélval* (rock art, pictographs, petroglyphs), Traditional Cultural Properties and landscapes, village complexes, and an extensive Luiseño artifact record in the vicinity of the Project. This culturally sensitive area is affiliated with the Pechanga Band of Luiseño Indians because of the Tribe's cultural ties to this area as well as extensive history with both this Project and other projects within the area.

[1]See e.g., Executive Memorandum of April 29, 1994 on Government-to-Government Relations with Native American Tribal Governments, Executive Order of November 6, 2000 on Consultation and Coordination with Indian Tribal Governments, Executive Memorandum of September 23, 2004 on Government-to-Government Relationships with Tribal Governments, and Executive Memorandum of November 5, 2009 on Tribal Consultation.
[2] See California Public Resource Code §5097.9 et seq.; California Government Code §§65351, 65352.3 and 65352.4

The Pechanga Tribe has a specific legal and cultural interest in this Project as the Tribe is culturally affiliated with the geographic area that comprises the Project property and is the closest affiliated tribe to the Property. The Tribe has been named the Most Likely Descendent (Cal. Pub. Res. C. §5097.98) on Projects in the nearby vicinity of the proposed Project and has specific knowledge of cultural resources and sacred places near the proposed Project which we have shared with the CPUC on previous occasions on this and other projects.

The Tribe welcomes the opportunity to meet with the CPUC to further explain and provide documentation concerning our specific cultural affiliation to lands within your jurisdiction, if so desired.

PROJECT MITIGATION MEASURES

The proposed Project is on land that is within the traditional territory of the Pechanga Band of Luiseño Indians. The Pechanga Band is not opposed to this Project; however, we are opposed to any direct, indirect and cumulative impacts this Project may have to tribal cultural resources, including TCPs. The Tribe's primary concerns stem from the Project's proposed impacts on Native American cultural resources. The Tribe is concerned about both the protection of unique and irreplaceable cultural resources, such as Luiseño village sites, sacred sites and archaeological items which would be displaced by ground disturbing work on the Project, and on the proper and lawful treatment of cultural items, Native American human remains and sacred items likely to be discovered in the course of the work.

After review of the DEIR, the Pechanga Tribe suggests revisions to the Project Commitment B: Worker Environmental Awareness Plan to include Tribal participation as one of the goals of the plan is to make workers on the Project aware of the potential to impact the Tribe's ancestors and their belongings. It only makes sense to include the contemporary descendants of the indigenous people who once lived in this area in an Awareness Plan. Pechanga knows that Southern California Edison (SCE) has involved other tribes in these trainings and Pechanga requests the same inclusion.

Further, inclusion in the survey required in **MM CR-1a** by a Tribal monitor should be required. As we have participated in various other surveys conducted for the Project, we should also be included in any required under this mitigation measure. Line 7 on page 4.5-24 should read: "archaeologist or cultural resources specialist and Native American tribal monitor(s) and reviewed and approved by the CPUC. If a resource is."

Line 17 of **MM CR-1b** must also include participation by the Pechanga Tribe and should be revised to read: "Retain a qualified archaeologist, who shall prepare the CRMTP in consultation with the Native American Tribe(s), to oversee archaeological and." The required Evaluation Plan, Data Recovery Plan, Data Recovery Memo and the Data Recovery Report must also be prepared in consultation with the Native American Tribe(s).

As stated above, the Pechanga Tribal monitors provide a professional service, one which is taken very seriously, as the monitoring process is oftentimes the last anyone will observe of the

Ancestors. While the Tribe appreciates the opportunity to monitor projects within its ancestral territory, compensation should be offered for the professional service provided. Just as the CPUC requires retention of the project archaeologist, construction operators, biologists and other technical advisors, Tribes must be afforded the same respect and be retained and offered compensation for their services. Thus, **MM CR-2** Line 18 of page 4.5-26 should be revised to read: "Retain one Native American monitor from each tribe that has requested involvement (Pechanga and Soboba) to observe ground-disturbing activities and all work at P33-00714,."

Finally, the Pechanga Tribe requests that the CPUC provide appropriate mitigation to address the impacts to the Traditional Cultural Properties that were acknowledged in the DEIR but not afforded proper mitigation. This mitigation could include but is not limited to: ethnographic and landscape studies, climate change studies, rock art studies, TCP analysis, visual studies and associated mitigation to lessen pole impacts, joint publications and/or presentations at professional meetings, interpretative signage (if appropriate), traditional ecological knowledge experiments and studies, and/or others as appropriate. Additional consultation with the CPUC and the Pechanga Tribe should occur in order to determine the best mitigation type for the Project.

The Tribe reserves the right to fully participate in the environmental review process, as well as to provide further comment on the Project's impacts to cultural resources and potential mitigation for such impacts.

The Pechanga Tribe looks forward to working together with the CPUC in protecting the invaluable Pechanga cultural resources found in the Project area. Please contact me at 951-770-8104 or at ahoover@pechanga-nsn.gov once you have had a chance to review these comments so that we might address any outstanding issues concerning the mitigation language. Thank you.

Sincerely,

Anna Hoover
Cultural Analyst/Assistant THPO

Cc Pechanga Office of the General Counsel

Local Agencies

Midbust, Jessica

From: Richard J. MacHott, LEED Green Assoc. <rmachott@Lake-Elsinore.org>
Sent: Thursday, July 14, 2016 11:57 AM
To: VIG/ASP
Cc: Grant Taylor; Grant Yates; Nicole Dailey, MBA
Subject: DEIR for Valley-Ivyglen Subtransmission Line Project and Alberhill System Project
Attachments: Alberhill Project and Valley-Ivyglen DEIR comment letter 071316.pdf

Follow Up Flag: Follow up
Flag Status: Flagged

California Public Utilities Commission
RE: VIG/ASP
c/o Ecology and Environment, Inc.
505 Sansome Street, Suite #300
San Francisco, CA 94111

To whom it may concern:

Please find attached the City of Lake Elsinore's comments regarding the Comments to Draft Environmental Impact Report for Southern California Edison's Alberhill System Project (CPUC Application A.09-09-022) and Valley–Ivyglen Subtransmission Line Project (CPUC Application A.07-01-031). The original letter is being mailed to you.

By return e-mail, please confirm receipt of our comment letter.

Richard J. MacHott, LEED Green Assoc.
Planning Manager
City of Lake Elsinore
PH:(951) 674-3124 Ext. 209
FX: (951) 471-1419

CITY OF LAKE ELSINORE
DREAM EXTREME

July 13, 2016

California Public Utilities Commission
RE: VIG/ASP
c/o Ecology and Environment, Inc.
505 Sansome Street, Suite #300
San Francisco, CA 94111

Re: *Comments to Draft Environmental Impact Report for Southern California Edison's Alberhill System Project (CPUC Application A.09-09-022) and Valley–Ivyglen Subtransmission Line Project (CPUC Application A.07-01-031)*

To whom it may concern:

The City of Lake Elsinore ("City") has reviewed the Draft Environmental Impact Report ("DEIR"), State Clearinghouse Nos. 2008011082 and 2010041031, which was prepared in connection with two Southern California Edison ("SCE") proposals in Lake Elsinore and surrounding communities.

SCE's Alberhill System Project (California Public Utilities Commission ["CPUC"] Application A.09-09-022) (the "Alberhill Project") will consist of construction of the proposed Alberhill Substation along with the above-ground installation of approximately 21 miles of 115-kilovolt (kV) transmissions lines weaving through some of Lake Elsinore's most heavily traveled thoroughfares, including Mission Trail, Malaga Street, Casino Drive, Auto Center Drive, Third Street, Pasadena Street, Nichols Road, and Lake Street in proximity to established commercial zones and residential neighborhoods.

SCE's second proposal, the Valley–Ivyglen Subtransmission Line Project (CPUC Application A.07-01-031) (the "Valley-Ivyglen Project") will enter the City at State Route 74 just east of Interstate 15 and, like the Alberhill Project, will wind its way along Third Street, Pasadena Street, Nichols Road, and Lake Street and impact those areas with a dual set of transmission lines standing side by side 100 feet in the air. The Alberhill Project and the Valley-Ivyglen Project are collectively referred to as the "Proposed Projects."

SCE is to be commended for its commitment to ensuring that Lake Elsinore and the surrounding communities are adequately served with both sufficient resources to serve future growth and system redundancy to ensure greater reliability. However, SCE's obligation to serve its customers is not singular. Its role is not simply to supply electricity; it must diligently assure that its facilities not blight already-impacted communities and, perhaps more importantly, it must

951.674.3124
130 S. Main Street
Lake Elsinore, CA 92530
www.lake-elsinore.org

recognize opportunities to improve communities by thoughtfully investing in undergrounding transmission lines.

The City believes that the DEIR fails to comply with the requirements of the California Environmental Quality Act ("CEQA") (Pub. Res. Code §§ 21000, *et seq.),* and the State of California Guidelines for the California Environmental Quality Act ("Guidelines")(14 Cal. Code Regs. §§15000 *et seq.)*. Accordingly, the City requests that CPUC suspend any further consideration of the Alberhill Project and the Valley-Ivyglen Project until a DEIR that fully discloses and analyzes the potential impacts of the Proposed Projects, fully considers feasible alternatives (including alternative locations and alternative technologies), and fully complies with all other CEQA requirements has been prepared and recirculated for public review and comment.

A. <u>The DEIR for the Projects is Inadequate</u>.

The DEIR fails to satisfy the requirements of the CEQA on the following grounds, as addressed in detail below: (1) inadequate aesthetics impact analysis; (2) inadequate hazards impact analysis of EMF; (3) inadequate hazard analysis related to the Skylark Field Airport; (4) inadequate socioeconomics impact analysis; (5) environmental justice concerns; and (6) inadequate alternatives analysis. As a result of these failings, major revisions to the DEIR are necessary to comply with CEQA and require recirculation.

1. *Aesthetic Impacts within the City of Lake Elsinore.*

The DEIR analysis of aesthetic impacts is not merely inadequate; it is fundamentally flawed. The drafters of the DEIR have simply failed to appreciate the Proposed Projects before the CPUC and the impacts on the Lake Elsinore environment. The DEIR creates a paradigm largely guided by the sense that the only visual impacts associated with the Proposed Projects is how they are viewed from the Interstate 15 freeway and State Route 74 and, having adopted that paradigm, employs the Federal Highway Administration's 1988 *Visual Impact Assessment for Highway Projects*. With over 11 miles of power lines to be added within the City's municipal boundaries, the DEIR presents a paltry 15 key viewpoints, focusing on views from the freeway or busy State Route 74. And yet virtually none of the proposed powerlines within the City will be within the Interstate 15 or State Route 74 rights of way. Indeed, the Proposed Projects here are simply ill-suited for analysis using criteria developed for the federal interstate system. The projects barely touch the Interstate 15 right of way. Instead, the Proposed Projects' impacts are felt in Lake Elsinore on a distinctly local level.

Sorely missing from the DEIR's aesthetic analysis are key viewpoints from streets within the City in which there are no existing overhead powerlines but that will now have such lines, streets that have overhead lines on one side of the street that due to project development will have lines on both sides of the street, and streets that have existing modest powerlines capable of future undergrounding at a reasonable cost that will now be burdened with a set of dual powerlines foreclosing a financially viable potential for future undergrounding.

In the few instances in which the DEIR actually discloses visual impacts, that disclosure shows marked indifference to local impacts within the City. The DEIR's analysis of Key Viewpoint 8 exemplifies this approach. The City of Lake Elsinore carefully conditioned the retail and commercial centers bordered by Third Street and Pasadena Street to underground utilities, as demonstrated by the retail center shown in Key Viewpoint 8 at the corner of Central and Pasadena. Those commercial and retail businesses have thrived in this modern business center which meets the aesthetic expectations of both its owners, their patrons, and the community. The Proposed Projects lay waste to those expectations as both projects will run 100-foot poles and powerlines down Third Street and the entire length of Pasadena (ASP 3/VIG 4.)

Despite the City's efforts to successfully implement development of modern communities and retail centers in which utilities are routinely undergrounded as exemplified on Pasadena Street, the DEIR response in effect says: "we don't think anyone will notice these powerlines." Using the above-referenced federal guidelines for interstate freeways and scenic highways, the DEIR concludes that visual impacts in the City's prime business park are somehow "moderately low because it is experienced mostly by people working or traveling in the area for work or personal business." (p.4.1-22)

This disconcerting bias against impacts experienced by both local businesses and the local community is further exemplified in "moderately low" visual sensitivity attributable to the installation of taller power lines on Mission Trail "because it is experienced on a regular basis by a moderate number of viewers consisting primarily of local residents, workers, commuters, and people engaged in shopping and business activities who would not have a high concern for visual changes." (Key Viewpoint 13, p. 4.1-24) If the drafter of the DEIR so readily dismisses the sensibilities of residents, workers, commuters and persons engaged in commerce within the City; whose sensibilities are left to consider when assessing visual impacts?

Indeed, if the drafter of the DEIR is to be believed, any aesthetic appeal to undergrounding utilities in neighborhoods and commercial centers is simply

illusory. Those users, according to the DEIR, will simply not notice above-ground powerlines. This point of view stands in stark contrast to the development expectations of virtually every city within the State which routinely mandate undergrounding of utilities in new subdivisions and commercial centers. That undergrounding is performed without question or dispute because undergrounding of utilities is consistent with the community's development expectation along with the expectation of property owners, their tenants, visitors and patrons who have grown to place a premium on development aesthetic.

Why has the DEIR so profoundly missed the mark on aesthetic impacts? Because it utilizes an utterly outdated aesthetic standard—now 28 years old—that even the notoriously glacial Federal Highway Administration has abandoned. The Federal Highway Administration's 2015 replacement *Guidelines for the Visual Impact Assessment of Highway Projects* acknowledge that the 1988 guidelines as simply antiquated: "The new guidelines recommend engaging the public to a higher degree than earlier [Visual Impact Assessment] VIA methods, to achieve a better understanding of how people define visual quality and how they interpret changes to it." (2015 Guidelines, p. 1-3). By failing to engage the public and instead relying on outdated (and, candidly, inapplicable guidelines for the Proposed Project), the DEIR's consistently understates the visual impact of the Proposed Projects.

The modern expectation that visual impacts will be at the forefront of new development is embodied in the City's applicable land use standards which seek to protect the character of the surrounding environment and not limit that protection to designated "scenic" view sheds as proposed in the DEIR. The City, like many municipalities, has authorized the formation of utility undergrounding districts (Lake Elsinore Municipal Code ["LEMC"] 12.16), mandated that new development underground utilities of less than 34.5 kv (LEMC 16.64), and mandated the undergrounding of utilities in specific plan districts to the extent feasible (LEMC 17.204.030.H).

The Alberhill and Valley-Ivyglen Projects will degrade the visual quality of every area of the City they touch, as the developments in those areas will be less attractive amongst the imposing pole structures and power lines. Undergrounding of these transmission lines is feasible to mitigate the significant impacts to aesthetics from the Proposed Projects. The CPUC should mandate that mitigation.

2. *Hazards to Sensitive Receptors.*

Ten schools are located within one-quarter mile of the Project. (p. 4.8-4.) Moreover, "[s]ensitive receptors are as close as 20 feet from" the 115-kV subtransmission line. (p. 4.3-30.) The DEIR's discussion of the health effects on sensitive receptors considers the use of hazardous substances such as motor fuel, solvents, and lubricating fluid but it does not consider emissions of electric and magnetic currents.

The DEIR recognizes that the potential health effects of electromagnetic fields ("EMFs") is an area of community concern, but is steadfast in refusing to discuss it:

> At present, the CPUC does not consider EMFs, in the context of the California Environmental Quality Act (CEQA), to be an environmental impact because there is no agreement among scientists that EMFs create a potential health risk and because CEQA does not define or adopt standards for defining any potential risk from EMFs. Therefore, EMFs are not addressed in the Environmental Impacts and Mitigation Measures section of this document.

(pp. 4.8.-6.7.)

The fact that "CEQA does not define or adopt standards for defining any potential risk from EMFs" does not relieve the DEIR preparer from the responsibility to evaluate the potential impacts of EMFs. The intent of CEQA is to regulate activities to prevent both adverse effects on the environmental and to the health and safety of the people of the state. (See Pub. Res. Code, § 21000.) Section 15126.29(a) of the CEQA Guidelines specifically states that EIR discussion should include "health and safety problems caused by the physical changes." The CEQA Guidelines acknowledge that when adopting thresholds of significance, "a lead agency may consider thresholds of significance previously adopted or recommended by other public agencies or recommended by experts." (Guidelines, §15064.7) The United States Environmental Protection Agency identifies exposure to electromagnetic fields and falling power lines as potential hazards relevant to the siting of schools. (EPA School Siting Guidelines.) As such, the DEIR should address the health effects of electric and magnetic fields as a potential impact to sensitive receptors. The DEIR should quantify the levels of EMFs that sensitive receptors may be exposed to, and then provide studies relating to those levels.

The DEIR acknowledges that the CPUC has authorized "[n]o-cost and low-cost" measures to reduce magnetic fields that may be incorporated into the design of a project, such measures are not provided in the DEIR. The DEIR should provide a description of the potential "no-cost and low-cost" measures to reduce EMF and should explain how such measures would be effective in reducing exposure to EMFs.

3. *Airport.*

The DEIR's discussion of airports indicates that "sections of 115-kV Segments ASP4 and ASP5 are located within the Influence Area of the Skylark Field Airport ...." (p. 4.8-19.). The DEIR goes on to disclose that:

> Sections of 115-kV Segments ASP4 and ASP5 would be located less than 1,000 feet east of Skylark Field Airport (Figure 2-2b). Construction would occur along an existing 115-kV subtransmission line and within an existing ROW.
>
> The lightweight steel poles installed along 115-kV Segments ASP4 and ASP5 within the Influence Area of Skylark Field Airport would range in height from 70 to 115 feet (Figure 2-6). The Skylark Field Airport manager stated that an initial review of the project did not raise concerns with regard to the proposed Alberhill Project as long as the structures installed are less than 120 feet high (Gulledge personal communication 2010). The 115-kV structures would range from 70 to 115 feet tall. Because the proposed structures would be less than 120 feet in height, installation of structures along ASP4 and ASP5 within the vicinity of the Skylark Field Airport would not result in a safety hazard for people working in the project area. Impacts under this criterion would be less than significant.

(p. 4.8-41)

Bluntly stated, this anecdotal information masquerading as analysis is simply incredible. As a point of beginning, while the office and airport hangars at Skylark Field are approximately 1,000 feet away from the project, the flight path appears to be significantly less than 1,000 feet away from the corner of Waite and Mission Trail where ASP 4 and ASP 5 meet. And that the entirety of the safety analysis is a casual conversation with the airport "manager" who had conducted an "initial review" of the project is shocking. (p. 4-8-41)

There is no analysis of the actual flight patterns at Skylark Field or the typical altitude of planes as they approach the runway. There is no analysis of likely flight patterns that may be utilized during inclement weather as pilots reduce plane altitudes to accommodate a visual landing. There is no information as to the impact of strong cross winds that are widely known to occur in the afternoons in Lake Elsinore.

Moreover, in considering the apparent safety "threshold" of 120-feet proposed by the airport "manager," no allowance has been made for the fact that the airport runway is at a lower elevation than the elevation at Waite and Mission Trail. Indeed, the runway at Skylark field lies in a floodplain. And, while the City recognizes that the Federal Aviation Administration does not assert jurisdiction over Skylark Field, it nonetheless gives guidance to the placement of powerlines within a flight path of any airport. Yet, the guidance from one the government's most knowledgeable agencies is left unreviewed in favor to the musings of the airport "manager."

In summary, the powerlines in ASP 4 and ASP 5 could potentially create (and appear likely to create) a hazard for aircraft. Accordingly, the DEIR is required to address potential impacts related to the Alberhill Project's vicinity to the Skylark Field Airport and propose mitigation measures, including undergrounding, to ensure the public's safety. The analysis of airport safety in the existing DEIR is not merely inadequate; it is irresponsible.

4. *Socioeconomic Impacts.*

CEQA requires analysis of reasonably foreseeable indirect physical impacts as well as direct impacts. (Guidelines, § 15064(d).) Indirect impacts that must be considered include social or economic effects that result in a physical change in the environment. (Guidelines, § 15064(e).)

The Proposed Projects will have significant aesthetic impacts on the commercial uses along Mission Trail, Malaga Street, Casino Drive, Auto Center Drive, Third Street and Pasadena Street; residential development along Nichols Road, and Lake Street will likewise be heavily impacted.

The commercial uses impacted by the placement of transmission structures and lines will be less attractive and have less appeal to shoppers than non-impacted sites. These powerlines will make ingress and egress more difficult. Signage restrictions due to conflicts with the overhead transmission lines will also result in reduced visitors and profitability to the commercial uses. As a result, those commercial uses will only be able to draw lower quality tenants, and/or

commercial development will be shifted away from the freeway frontage to other sites. Consequently, businesses along the commercial corridors in the City will have reduced income.

Development for residential uses will also be less successful due to the Proposed Projects, as people do not find the transmission structures and lines attractive and they fear the health and safety consequences of living near the high EMFs. Property values along the Proposed Projects area will be reduced.

As a result of the aesthetic and hazard impacts, the planned and foreseeable land uses in the Proposed Projects' area will not be desirable or economically viable. Blight or urban decay may then occur, as land lies underdeveloped, people move from existing residences leaving them vacant and the vacancy rate of existing commercial buildings increase leading to potential urban decay. In *Bakersfield Citizens for Local Control v. City of Bakersfield* (2004) 124 Cal.App.4th 1184, the court decertified EIRs for failure to consider urban decay. The court held that "land use decisions that cause a chain reaction of store closures and long-term vacancies, ultimately destroying existing neighborhoods and leaving decaying shells in their wake" must be studied, as they may constitute significant impacts. (*Bakersfield Citizens for Local Control, supra,* 124 Cal.App.4th at 1204.)

5. *Environmental Justice.*

Environmental justice refers to the concept that minority or low-income populations should not be disproportionately exposed to environmental hazards. In 1999, the State of California enacted legislation establishing environmental justice as an aspect of state law. California law defines environmental justice as "the fair treatment of people of all races, cultures, and incomes with respect to the development, adoption, implementation, and enforcement of environmental laws, regulations, and policies." (Gov. Code, § 65040.12(e); see also Pub. Res. Code, § 71110.)

Residents of the cities of Murrieta, Murrieta Springs, Perris, Menifee, and Wildomar, along with portions of the County of Riverside, would benefit from the Proposed Projects to the detriment of residents of the City of Lake Elsinore. While these residents will gain increased power reliability from the Proposed Projects, Lake Elsinore residents will potentially suffer from exposure to high levels of EMFs, aesthetic impacts, decline in property values, reduced socioeconomic conditions, and blight. The DEIR should analyze whether the residents of Lake Elsinore are disproportionately exposed to the Proposed Projects' impacts as compared to the residents of these other benefitted communities. The DEIR should also propose

an alternative route that does not disproportionately burden residents of the City of Lake Elsinore.

6. *Alternatives.*

The Proposed Projects include the undergrounding of transmission lines in some discrete areas outside of the City. Clearly, then, undergrounding is technically feasible. Undergrounding the 115 kV lines could reduce impacts to aesthetics, socioeconomics, and urban decay to less than significant.

CEQA requires the adoption of all feasible alternatives and mitigation measures that substantially reduce the environmental impacts of projects. (Pub. Res. Code, § 21002; Guidelines, § 15126.6 (a).) The fact that an alternative may be more expensive or less profitable is not sufficient to show that the alternative is financially infeasible. (*Center for Biological Diversity v. County of San Bernardino* (2010) 185 Cal.App.4th 866, 883.)

CEQA also requires an EIR present a reasonable range of alternatives to the project or to the location of the project which reduce the environmental impacts of the project. (Guidelines, § 15126.6(a); *Citizens of Goleta Valley v. Board of Supervisors* (1990) 52 Cal.3d 553.) The DEIR fails to present a reasonable range of alternatives. Alternatives should include other technologies and routes. The DEIR does not analyze any alternative routes for the Proposed Projects.

It appears that seven alternative routes were considered for the Valley-Ivyglen Project but were eliminated from the alternatives analysis. (p. 4.5-3) Particularly troubling is the failure to explore a route through the sparsely populated and largely undeveloped areas east of Interstate 15, north of State Route 74. These alternative routes were at least presented in the early environmental analysis of the Valley–Ivyglen Subtransmission Line and Fogarty Substation Project in 2007. Yet, the CPUC has been deprived of considering those alternatives in this DEIR. In light of the Proposed Project's striking visual impacts within the City of Lake Elsinore, the so-called "Northern Corridor" route deserves consideration by the CPUC as a viable alternative.

Instead, both Projects trounced through Lake Elsinore's highly regarded business parks and then head northwest to further impact critical future residential development along Nichols Road and Lake Street. Despite the location of the proposed Alberhill Substation on the north side of Interstate 15, the VIG 6 and VIG 7 remain on the southern side of Interstate 15 in order to deftly avoid impacting the highly-prized commercial centers located at Temescal Canyon in unincorporated Riverside County, just north of the City's boundaries. Approaching the new shopping center at De Palma Road and the residential development that

lies just north, the powerlines once again cross over the freeway apparently in order to avoid impacting these sensitive receptors. Indeed, it appears, based on the repeated freeway crossovers, that the featured route is particular sensitive to impacts in virtually every community except Lake Elsinore.

Furthermore, although the EIR analysis of the alternatives is not required to be as comprehensive as the EIR analysis of the Proposed Projects, the alternative's discussion is so cursory as to prevent a meaningful comparison. For example, the Air Quality discussion of VIG Alternative M (Underground along the Entire Proposed Project Alignment) states that "[a]s shown in Appendix B, the undergrounding activities of the proposed project would create the greatest Peak Daily Emissions." (p. 5-18) However, the CPUC web site posting of the DEIR fails to provide Appendix B for public review. Without the supporting data to support the DEIR conclusion, the public is denied a reasonable opportunity to evaluate this analysis. In addition to making Appendix B available for public review, the DEIR analysis should have included a summary of the Air Quality and GHG Emission Calculations for each alternative and then evaluated whether additional mitigation measures would reduce the potential impacts to the same or lower levels than the Proposed Projects.

The DEIR's analysis of Land Use and Planning for Alternative M states that "[u]ndergrounding the entire alignment would neither create nor avoid a land use conflict that would result in significant environmental impacts. Impacts would be the same under this alternative as for the proposed project." (p. 5-20) As discussed above, this conclusion is clearly false. The undergrounding of the Proposed Project would avoid many of the land use conflicts of the Proposed Project.

Additionally, the Table 5-1 Summary of the Valley-Ivyglen Project Alternatives Analyses and Determination (p. 5-3) is structured to be misleading. For example, this table states that the VIG Alternative M impacts on Biological Resources, Cultural Resources, Hazards and Hazardous Materials, and Transportation and Traffic are "greater" than the Proposed Projects, but fails to point out that these impacts can be mitigated to less than significant levels with the mitigation measures similar to those developed for the Proposed Project. (pp. 5-19 through 5-21). It is clear that the comparison of project alternatives is biased toward the Proposed Projects.

Rather than propose an all or (almost) nothing approach to undergrounding, the DEIR should propose a thoughtful undergrounding alternative taking into account the areas where undergrounding may not be appropriate due to disturbance of sensitive habitat or the location of known cultural resources but providing for undergrounding in urban areas in which such concerns are lessened and aesthetic impacts are heightened. This type of "hybrid"

alternative has the potential to be the environmentally superior alternative and should be included. The range of alternative presented in the DEIR are not just inadequate; they are mystifying.

In summary, the DEIR fails to comply with CEQA's directive to "describe a reasonable range of alternatives to the project, or to the location of the project." (Guidelines, § 15126.6(a).)

7. *Impacts Outside of the City of Lake Elsinore.*

We have purposefully focused our comments above to those impacts that will be experienced within the City's municipal boundaries. However, we do believe that the Alberhill Substation deserves additional comment. The DEIR correctly identifies the visual impacts of the substation as "moderately high" and "high." However, the DEIR falls short in providing elevation drawings of the substation, dimensions, and depictions of proposed building materials. In failing to do so, the DEIR deprives those parties commenting on the DEIR an opportunity to make specific recommendations as to color, architecture and landscaping that could go a long way toward minimizing those identified "moderate high" and high visual impacts. We urge the CPUC to require that the DEIR include detailed elevation drawings (including the 49-feet tall switch racks), dimensions, building materials, and proposed landscaping of the Alberhill Substation for review and comments by the public.

B. <u>Recirculation Required</u>.

"When significant new information is added to an environmental impact report after notice" that the DEIR is available for public review, recirculation of the EIR is required. (Pub. Res. Code, § 21092.1.) In *Laurel Heights Improvement Assn. v Regents of Univ. of Cal.* (1993) 6 Cal.4th 1112, 1130, the court gave four examples of situations in which recirculation is required:

- When the new information shows a new, substantial environmental impact resulting either from the project or from a mitigation measure;

- When the new information shows a substantial increase in the severity of an environmental impact, except that recirculation would not be required if mitigation that reduces the impact to insignificance is adopted;

- When the new information shows a feasible alternative or mitigation measure, considerably different from those considered in the EIR, that clearly would lessen the

environmental impacts of a project and the project proponent declines to adopt it; and

- When the draft EIR was "so fundamentally and basically inadequate and conclusory in nature" that public comment on the draft EIR was essentially meaningless.

The problems with the DEIR discussed above require recirculation for similar reasons as those set forth in *Laurel Heights*. The DEIR failed to consider the potentially significant impact of blight or urban decay. Impacts to aesthetics; hazards to sensitive receptors, impacts to the Skylark Field Airport, and socioeconomic effects are more severe than the DEIR recognized. Moreover, undergrounding is a feasible alternative or mitigation measure. Therefore, a DEIR revised to address the issues set forth herein and raised by other comment letters must be prepared and recirculated.

C. Conclusion.

In sum, the Proposed Projects will adversely affect private property values and result in impacts to land that make it no longer be suitable for residential or high quality commercial uses. This will, in turn, result in a lower socioeconomic base for the City of Lake Elsinore and its residents and businesses, and raises environmental justice concerns. As an indirect physical result, the Proposed Projects have the potential to cause blight or urban decay.

We request that the DEIR be revised to address the issues set forth herein and raised by other comment letters, and that the revised DEIR be recirculated for public review and comment in accordance with CEQA. Thank you for your attention to our concerns.

Sincerely,

Brian Tisdale
Mayor

Robert E. Magee
Mayor Pro Tem

Steve Manos
Council Member

Daryl Hickman
Council Member

Natasha Johnson
Council Member

cc: Supervisor Kevin Jeffries, Board of Supervisors, County of Riverside
Assemblywoman Melissa A. Melendez, California State Assembly
Senator Jeff Stone, California State Senate
Steve Manos, Riverside County Airport Land Use Commissioner
Jeremy Goldman, Regional Manager of Southern California Edison
Grant Yates, City Manager, City of Lake Elsinore

Community Development Department
Planning Division
14177 Frederick Street
P. O. Box 88005
Moreno Valley CA 92552-0805
Telephone: 951.413-3206
FAX: 951.413-3210

May 25, 2016

California Public Utilities Commission
Mr. Jensen Uchida, CPUC Project Manager
RE: VIG/ASP
C/o Ecology and Environmental Inc.
505 Sansome Street, Suite 300
San Francisco, CA 94111

Re: Notice of Availability for the Sothern California Edison Valley-Ivyglen Subtransmission Line and Alberhill System Projects Draft Environmental Impact Report (EIR)

Dear Mr. Uchida,

The City of Moreno Valley appreciates the opportunity to comment on the Draft Environmental Impact Report (FEIR) for the Southern California Edison Valley-Ivyglen Subtransmission Line Project and Alberhill System Project.

The proposed project is located in unincorporated southern Riverside County and in close proximity to the City of Lake Elsinore. As the project will not negatively impact the City of Moreno Valley, we do not have any comments to provide on the environmental document.

We look forward for the opportunity to review the final EIR once it becomes available. Please include the City on any mailing lists regarding final documents as well as for future notifications of meetings/public hearings associated with the project.

Should you have any questions or concerns, please contact Mark Gross, Senior Planner at (951) 413-3215.

Sincerely,

Mark Gross, AICP
Senior Planner

Cc Richard J. Sandzimier, Planning Official

Midbust, Jessica

From:	Matthew Bassi <mbassi@cityofwildomar.org>
Sent:	Thursday, July 14, 2016 2:33 PM
To:	VIG/ASP; Jeremy Goldman (Jeremy.Goldman@sce.com)
Cc:	Gary Nordquist; Dan York
Subject:	CITY OF WILDOMAR COMMENTS - ALBERHILL SYSTEM PROJECT DEIR REVIEW
Attachments:	SCE Alberhill EIR Comments 7-14-16.pdf
Importance:	High

Please accept the following comment letter on the project referenced above. We respectfully request a replay email noting the City's comment letter has been received. If you have any questions, please call me at your convenience.

Matthew C. Bassi
Planning Director

City of Wildomar
23873 Clinton Keith Road, Suite 201
Wildomar, CA 92595
Work: 951-677-7751 x213
Fax: 951-698-1463

City Hall Hours:
Monday - Thursday
8:00 a.m. - 5:00 p.m.

Reminder: City Hall is Closed Friday's

All e-mail to and from the City of Wildomar may be considered public information and may be disclosed upon request.

Bridgette Moore, Mayor
Timothy Walker, Mayor Pro Tem
Bob Cashman, Council Member
Marsha Swanson, Council Member
Ben J. Benoit Council Member

23873 Clinton Keith Rd, Ste 201
Wildomar, CA 92595
951/677-7751 Phone
951/698-1463 Fax
www.CityofWildomar.org

July 14, 2016

California Pubic Utilities Commission (CPUC)
c/o Ecology and Environment, Inc.
505 Sansome Street, Suite #300
San Francisco, CA 94111

Subject: Southern California Edison (SCE) Alberhill System Project Environmental Impact Report (EIR)

Dear CPUC,

The City of Wildomar has reviewed the Draft EIR for the Southern California Edison (SCE) Alberhill System Project. Based on our review, the City of Wildomar offers the following comments to be addressed and responded to in the Final EIR.

1) The area from Lost to Beverly is already in a high fire hazard area. Will this new facility cause higher fire insurance costs to Wildomar residents living along this facility?

2) As noted in the DEIR, the alignment of this transmission line passes nearby existing residents living along the route. Will the upgraded facility have an EMF impact on these residents, and if so, it must be properly mitigated in accordance with CEQA provisions?

3) Given the aesthetics impacts from the proposed above ground transmission line, the City respectfully requests that the alignment along Mission Trail in the City of Wildomar be underground to reduce these aesthetic impacts to a less than significant level in accordance with CEQA provisions.

4) All work to be done in the City's of Wildomar's rights-of-way will require approval of an encroachment permit from the City Public Works Department. The encroachment permit forms can be obtained from the City staff or from the City's website at the following web address: http://www.cityofwildomar.org/uploads/files/public-works/Permit%20Applications/Encroachment%20Permit%20Application.pdf

5) Improvement Plans and Traffic Control plans shall be submitted to the city for review and approval prior to EP issuance. The city recognizes the State Manual on Traffic Control http://www.dot.ca.gov/trafficops/camutcd/ as the basis for preparation of Traffic control plans.

6) None of the EIR figures appear to show city limit lines which may be why the description of ASP4 neglects to mention that much of Mission Trail which is actually in the City of Wildomar. We ask that this be addressed and correctly shown. The City's zoning map may be reviewed and downloaded for the website at the following address: http://www.cityofwildomar.org/planning.asp

7) Construction noise in the City is exempt from the limitations of the noise ordinance pursuant to Chapter 9.48 of the Wildomar Municipal Code; however, the exemption periods are from 6:00 AM through 6:00 PM, which is a different period than "Commitment H" expressed in the DEIR. This should be reconciled and/or mitigated so the construction periods are consistent with the City's Noise Ordinance.

8) Table 2-2 on page 2-28 of the EIR explains the type of poles that will be used in ASP4 and ASP5 that will impact Wildomar. The Light Weight Steel (LWS) and Tubular Steel Pole (TSP) is shown on Figure 2-4; however, there is no corresponding illustration of the H-frame structures proposed in ASP5. There is also no indication of which poles will be used at locations along the route. While some of this may be determined during final engineering, there are features such as "guy wires" that could cross over roadways further degrading the aesthetic of the neighborhood along the route. Please provide design details that minimize aesthetic impacts. If the poles and wire underground as requested this comment could be address to a less than significant level.

9) The alignment for ASP4 and ASP5 travel through parts of Wildomar that have existing overhead lines. This project will worsen the view, make it more difficult to underground the lines in the future by reinvesting in the existing infrastructure. The existing lines should be underground to match the request for undergrounding of the new lines/poles.

10) The use of self-weathering poles as stated in MM AES-9, does not address the significant impact associated with taller poles and more lines in these areas. Further, the City requires that power lines be underground (Municipal Code Section 16.40.010). The EIR notes that wires are undergrounded by mitigation measure MM AES 10 discussed on page 4.1-61 of the EIR. The rationale used in the EIR, beginning on line 9 of page 4.1-61, is require "…undergrounding of the alignment in the area where there are no aboveground utility structures along Murrieta Road." The City does not dispute this as a rationale, however we strongly disagree that this should be the only standard applied to determine when undergrounding is appropriate.

The City looks forward to reviewing the Final EIR prior to its certification in accordance with CEQA provisions. If you have any questions regarding the City's comments, please contact me at (951) 677-7751, extension 213. I can also be reached via email at mbassi@cityofwildomar.org.

Sincerely,

Matthew Bassi

Matthew C. Bassi
Planning Director

CC: Gary Nordquist, City Manger
Dan York, Assistant City Manger/Public Works Director
Jeremy Goldman, SCE Local Public Affairs Southern California Edison

Midbust, Jessica

From: Hildebrand, John <JHildebr@rctlma.org>
Sent: Wednesday, June 01, 2016 7:35 AM
To: VIG/ASP
Cc: Weiss, Steven; Magee, Robert
Subject: Riverside County Comment Letter - Glen Ivy / Alberhill Transmission Lines
Attachments: Riverside_County_Comment_Letter_05-25-2016.pdf

Follow Up Flag: Follow up
Flag Status: Completed

Attached is Riverside County's Comment letter regarding the Draft EIR for the Glen Ivy / Alberhill Transmission Line extension project.

Thank you for your consideration,

Riverside County Planning Department
4080 Lemon Street, 12'th Floor
Riverside, CA 92501

John Earle Hildebrand III – *Principal Planner*
eMail: **jhildebr@rctlma.org**
Phone: (951) 955-1888

RIVERSIDE COUNTY
PLANNING DEPARTMENT

Steve Weiss AICP
Planning Director

Date: May 25, 2016

To: California Public Utilities Commission RE: VIG/ASP
c/o Ecology and Environment, Inc.
505 Sansome Street, Suite #300
San Francisco, CA 94111

From: Steve Weiss, AICP – Riverside County Planning Director

RE: Alberhill and Glen Ivy Draft Environmental Impact Report

The County of Riverside has had the opportunity to review the Draft Environmental Impact Report ("DEIR") for the proposed Alberhill and Glen Ivy transmission lines project. Understanding the importance of providing services to the area to accommodate future growth, the County still has several concerns regarding the proposed alignment through the Temescal Wash area, specifically at the transition point between the 115kV line underground to above ground, and running north to the proposed new substation. The County's concerns are identified as follows:

1. Aesthetics – The proposed transmission line runs parallel to the I-15 Freeway, crossing it at several points. The visual impact of transmission line towers and accompanying substations will create significant negative visual impacts to the area and interfere with established view corridors.

2. Habitat Conservation – The portion of the proposed transmission line extending through the Temescal Wash area, spans several Riverside County Multiple Species Habitat Conservation Plan ("MSHCP") criteria cells. The cells in this area contain a variety of plant and animal critical habitat, specifically identified as coastal sage scrub, riparian scrub, chaparral, and they also contain movement corridors for several animal species. The installation of new transmission line towers and accompanying substations in this area will interfere with the conservation requirements identified under the County's MSHCP and also potentially disrupt established movement corridors.

3. Existing Entitlements – Specific Plan No. 353 (Serrano Commerce Center), adopted by the Riverside County Board of Supervisors on September 8, 2010, includes approximately 489 acres of master planned streets, infrastructure, and development areas. The Specific Plan area lies immediately adjacent to the I-15 Freeway on the east, extending to the Temescal Wash on the west and spanning from Temescal Canyon Road on the south to Dawson Canyon Road to the north. The proposed transmission line corridor bifurcates the specific plan in its entirety and repurposes the land use in the northwestern portion for use as a large-scale substation. Furthermore, portions of the substation appear to be located within established Open Space-Conservation areas identified within the Specific Plan.

This same area currently contains an active surface mining operation, entitled under File No. RCL00135 (Ben's Mine). The proposed substation location is shown in the same location as the existing mining operations.

Given the aesthetic and habitat concerns, as well as the conflict with approved plans, the County of Riverside requests that Southern California Edison relocate the proposed transmission line towers and substation further east to a more appropriate location.

Steve Weiss, AICP
County of Riverside Planning Director

Enclosures:

1. Southern California Edison: Figure 3-3 (ASP Alternative DD)
2. Specific Plan No. 353: Figure 1-1 (Land Use Plan)



Existing Substations
500-kV Serrano Valley Transmission Line

ASP Alternative DD
Alternative Substation
115kV Aboveground
115kV Underground
500-kV Lines

Figure 3-3

ASP Alternative DD

Alberhill and Valley–Ivyglen Projects

Riverside County, California

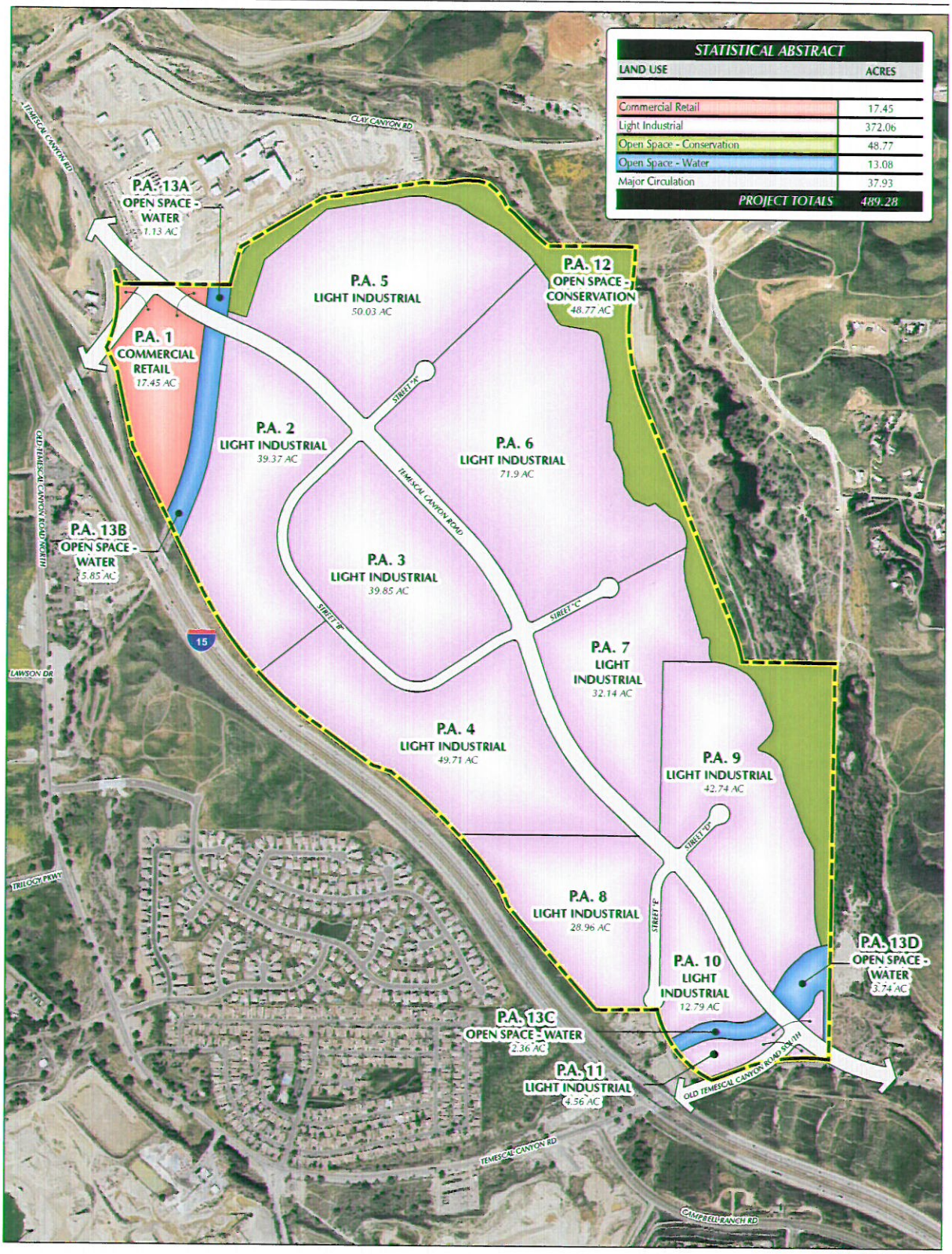

FIGURE 1-1

T&B PLANNING
17542 East 17th Street, Suite 100 Tustin, CA 92780
p. 714.505.6360 f. 714.505.6361
www.tbplanning.com

Land Use Plan

Midbust, Jessica

From: Hildebrand, John <JHildebr@rctlma.org>
Sent: Wednesday, June 01, 2016 7:35 AM
To: VIG/ASP
Cc: Weiss, Steven; Magee, Robert
Subject: Riverside County Comment Letter - Glen Ivy / Alberhill Transmission Lines
Attachments: Riverside_County_Comment_Letter_05-25-2016.pdf

Follow Up Flag: Follow up
Flag Status: Completed

Attached is Riverside County's Comment letter regarding the Draft EIR for the Glen Ivy / Alberhill Transmission Line extension project.

Thank you for your consideration,

Riverside County Planning Department
4080 Lemon Street, 12'th Floor
Riverside, CA 92501

John Earle Hildebrand III – *Principal Planner*
eMail: **jhildebr@rctlma.org**
Phone: (951) 955-1888

RIVERSIDE COUNTY
PLANNING DEPARTMENT

Steve Weiss AICP
Planning Director

Date: May 25, 2016

To: California Public Utilities Commission RE: VIG/ASP
c/o Ecology and Environment, Inc.
505 Sansome Street, Suite #300
San Francisco, CA 94111

From: Steve Weiss, AICP – Riverside County Planning Director

RE: Alberhill and Glen Ivy Draft Environmental Impact Report

The County of Riverside has had the opportunity to review the Draft Environmental Impact Report ("DEIR") for the proposed Alberhill and Glen Ivy transmission lines project. Understanding the importance of providing services to the area to accommodate future growth, the County still has several concerns regarding the proposed alignment through the Temescal Wash area, specifically at the transition point between the 115kV line underground to above ground, and running north to the proposed new substation. The County's concerns are identified as follows:

1. Aesthetics – The proposed transmission line runs parallel to the I-15 Freeway, crossing it at several points. The visual impact of transmission line towers and accompanying substations will create significant negative visual impacts to the area and interfere with established view corridors.

2. Habitat Conservation – The portion of the proposed transmission line extending through the Temescal Wash area, spans several Riverside County Multiple Species Habitat Conservation Plan ("MSHCP") criteria cells. The cells in this area contain a variety of plant and animal critical habitat, specifically identified as coastal sage scrub, riparian scrub, chaparral, and they also contain movement corridors for several animal species. The installation of new transmission line towers and accompanying substations in this area will interfere with the conservation requirements identified under the County's MSHCP and also potentially disrupt established movement corridors.

3. Existing Entitlements – Specific Plan No. 353 (Serrano Commerce Center), adopted by the Riverside County Board of Supervisors on September 8, 2010, includes approximately 489 acres of master planned streets, infrastructure, and development areas. The Specific Plan area lies immediately adjacent to the I-15 Freeway on the east, extending to the Temescal Wash on the west and spanning from Temescal Canyon Road on the south to Dawson Canyon Road to the north. The proposed transmission line corridor bifurcates the specific plan in its entirety and repurposes the land use in the northwestern portion for use as a large-scale substation. Furthermore, portions of the substation appear to be located within established Open Space-Conservation areas identified within the Specific Plan.

This same area currently contains an active surface mining operation, entitled under File No. RCL00135 (Ben's Mine). The proposed substation location is shown in the same location as the existing mining operations.

Given the aesthetic and habitat concerns, as well as the conflict with approved plans, the County of Riverside requests that Southern California Edison relocate the proposed transmission line towers and substation further east to a more appropriate location.

Steve Weiss, AICP
County of Riverside Planning Director

Enclosures:

1. Southern California Edison: Figure 3-3 (ASP Alternative DD)
2. Specific Plan No. 353: Figure 1-1 (Land Use Plan)



Existing Substations
500-kV Serrano Valley Transmission Line

ASP Alternative DD
Alternative Substation
115kV Aboveground
115kV Underground
500-kV Lines

Figure 3-3

ASP Alternative DD

Alberhill and Valley–Ivyglen Projects

Riverside County, California

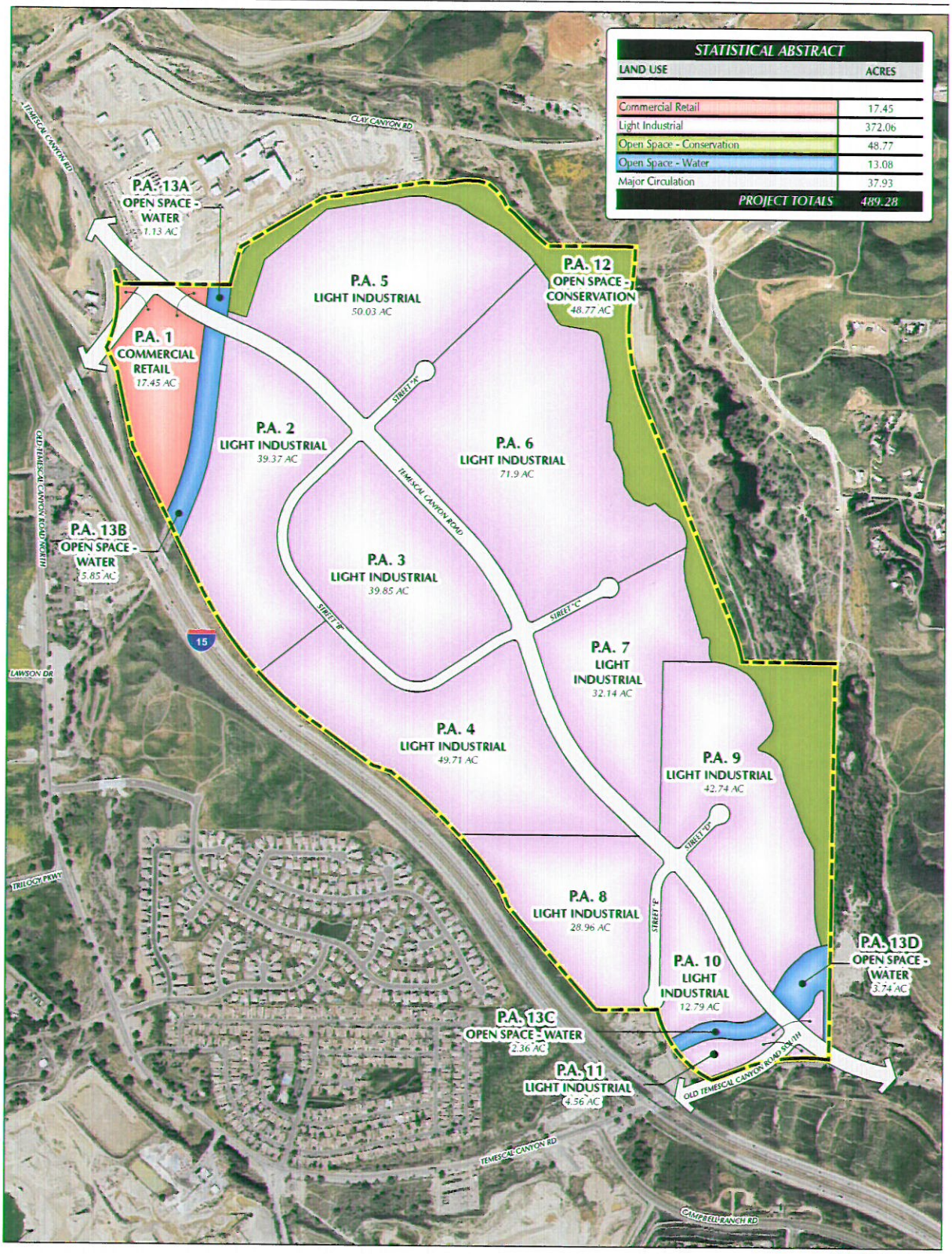

FIGURE 1-1

T&B PLANNING
17542 East 17th Street, Suite 100 Tustin, CA 92780
p. 714.505.6360 f. 714.505.6361
www.tbplanning.com

Land Use Plan

COUNTY OF RIVERSIDE
TRANSPORTATION AND LAND MANAGEMENT AGENCY

Transportation Department

Juan C. Perez, P.E., T.E.
Director of Transportation and Land Management

Patricia Romo, P.E.
Director of Transportation

July 15, 2016

California Public Utilities Commission, Re: VIG/ASP
c/o Ecology and Environment
505 Sansome St., Suite 300
San Francisco, CA 94111

RE: Draft Environmental Impact Report for Alberhill System Project and Valley-Ivyglen Substransmission Line Project

The Riverside County Transportation Department (County) appreciates the opportunity to submit comments on the Draft Environmental Impact Report (EIR) for the Alberhill System Project (ASP) and Valley-Ivyglen Substransmission Line Project (VIG). The projects propose to develop a new 500/115-kV substation, new 500-kV transmission lines, new and modified 115-kV subtransmmission lines with telecommunications system installations. The extent of the projects span across six Area Plans in Riverside County: Temescal Canyon, Elsinore, Mead Valley, Sun City/Menifee, and Harvest Valley/Winchester.

Our concerns are focused on the impacts ASP and VIG will have on the County's ability to construct new or expand existing roadways within our jurisdiction, particularly Temescal Canyon Road. The EIR simply does not provide sufficient information related to the location of the poles and transmission lines in order to determine their impacts to County roadways.

Temescal Canyon Road

North of Indian Truck Trail, the County's General Plan Circulation Element designates Temescal Canyon Road as an Arterial Highway with an 86-foot paved section and 128-foot full-width right-of-way. This portion of Temescal Canyon Road predominantly coincides with Segment VIG8 identified on Figure 2.2a in the EIR. As described on Pages 2-15 and 2-21, Segment VIG8 would be installed underground along Temescal Canyon Road within new right-of-way. The information provided only gives a general depiction where the VIG8 components will be installed, however the EIR needs to provide scaled plans with cross sections identifying the location of improvements relative to the existing road and right-of-way. The County views Temescal Canyon Road as a critical roadway for the area, serving as an emergency access route and providing relief as congestion develops on the freeway. Therefore improvements made by VIG and/or ASP that impede the County's ability to improve and widen Temescal Canyon Road would be highly detrimental to traffic safety and mobility and would be considered an impact.

The County is currently working to develop an alignment study for Temescal Canyon Road between Indian Truck Trail and Lake Street. This would cover Segments VIG5 and VIG6 shown on Figure 2.2a where poles and subtransmission lines are proposed to be installed on one or both sides of Temescal Canyon Road. The County requests the CPUC to require the project applicant to coordinate its design of Segments VIG5 and VIG6 with the County's alignment study for reasons mentioned previously.

State Route 74

An effort has begun to relinquish portions of State Route 74 between the Cities of Lake Elsinore and Perris to the County (refer to 2015-2016 AB-218). Additionally, in anticipation of this effort, the County is initiating a Project Study Report that would study an east-west corridor between I-215 and I-15 through a route utilizing Ethanac Road ultimately aligning and connecting to the Nichols Road interchange. This route overlaps with Segments VIG1 and VIG2. We request that the project applicant be required to coordinate with the County in order to develop a plan that works for both the road and utility projects.

General Plan Circulation Element Roadways

Alternatives to the proposed project utilize Temescal Canyon Road to a lesser extent, however roadways such as Campbell Ranch Road and De Palma Road are still employed. Comments made on Temescal Canyon Road apply similarly to other General Plan designated roadways in the County. Refer to County's General Plan Circulation Element for roadway designations and Ordinance 461 for detailed roadway design standards.

Encroachment permits

The County concurs with the EIR that the projects are required to obtain encroachment permits for each affected County roadway or other transportation right-of-way. Detail design plans of the proposed pole locations shall be submitted to the County for review and concurrence.

General Plan Circulation Element Policies

In addition to the County General Plan Policies related to roadway level of service, the Circulation Element also includes the policy below related to utility infrastructure.

> *C 20.5*
>
> *In order to protect the watershed, water supply, groundwater recharge, and wildlife values of watercourses, the County of Riverside will avoid siting utility infrastructure and associated grading, fire clearance, and other disturbances within or adjacent to watercourses, if there are feasible alternatives available, and discourage special districts and other governmental jurisdictions outside of Riverside County's authority, from doing so. Where such watershed utility siting locations cannot be avoided, the impacts on watercourses shall be minimized.*

We appreciate the importance of providing safe and reliable electrical service for anticipated growth, however it is essential that the CPUC and applicant work with us in order to eliminate any incompatibilities between the ultimate roadways and utilities.

Thank you again for the opportunity to review the EIR. Please contact me at (951) 955-2016 with questions or comments.

Sincerely,

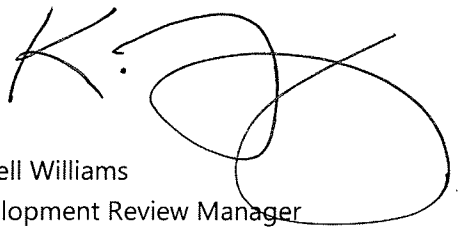

for Russell Williams
Development Review Manager

RUW:KKT

cc: Juan C. Perez, Director of Transportation and Land Management
Patricia Romo, Director of Transportation
Mojahed Salama, Deputy Director of Transportation

Organizations

Midbust, Jessica

From: Dauler, Heather <Heather.Dauler@CityofPaloAlto.org>
Sent: Tuesday, May 31, 2016 2:27 PM
To: VIG/ASP
Subject: BAMx Comments on VIG/ASP Draft EIR [WARNING: SPF validation failed]
Attachments: BAMx Comments on Alberhill Project DEIR_053116.pdf

Follow Up Flag: Follow up
Flag Status: Completed

Good afternoon:

Attached, please find comments from the Bay Area Municipal Transmission Group (BAMx) regarding the Draft Environmental Impact Report (DEIR) for the Southern California Edison (SCE) Alberhill Systems Project.

Thank you,

Heather Dauler, J.D.; LL.M.
Senior Resource Planner, Legislative & Reglatory Affairs
City of Palo Alto - Utilities Department
O: (650) 329-2214
Heather.Dauler@CityofPaloAlto.org

BAMx Comments on Draft Environmental Impact report for the Southern California Edison Alberhill Systems Project (Application No. A.09-09-022)

Submitted by	Company	Submitted to	Date Submitted
Debbie Lloyd *Utilities Compliance Manager* *City of Palo Alto Utilities* *debra.lloyd@cityofpaloalto.org* *650.329.2369*	*City of Palo Alto Utilities (CPAU)*	*CPUC c/o* *RE: VIG/ASP Draft EIR* *c/o Ecology and Environment, Inc.* *VIG.ASP@ene.com*	*May 31, 2016*

Bay Area Municipal Transmission group (BAMx)[1] appreciates the opportunity to provide comments to the California Public Utilities Commission (CPUC) on the Draft Environmental Impact Report (DEIR) for the Southern California Edison (SCE) Alberhill Systems Project and Valley–Ivyglen 115-kilovolt (kV) Subtransmission Line Project. BAMx's comments are specifically applicable to the Alberhill Systems Project (Proposed Project).

Background[2]

The California Independent System Operator (CAISO) approved the Proposed Project as a reliability-driven project in its 2009-10 Transmission Planning Process (TPP). Its need was driven by the anticipated load growth in the southwestern Riverside County area at that time, which is served by the Valley Substation. The Valley 115-kV transmission system serving the area load is divided into two separate 115-kV transmission systems: Valley North and Valley South. Each of the 115-kV systems is served by two 560 MVA 500/115 kV transformers. There appear to be no transmission facilities that connect the Valley North and the Valley South systems.

SCE projected that by 2014[3], the load served by Valley South system would exceed the combined capabilities of the two 500/115 kV transformers under normal conditions[4] and thus system reinforcements

[1] BAMx consists of Alameda Municipal Power, City of Palo Alto Utilities, City of Santa Clara, Silicon Valley Power, and Port of Oakland.

[2] The analysis in this report is based on two documents. The first document is contained SCE's Proponent's Environmental Assessment (PEA) for the Alberhill Systems project, dated September 30, 2009, http://www.cpuc.ca.gov/Environment/info/ene/alberhill/PEA%20Alberhill%20Vol.%201%20of%202.pdf. The second document was presented to the CAISO Board for the approval of the Proposed Project, titled, "Decision on Alberhill Substation Project," dated December 9, 2009, http://www.caiso.com/2480/2480a98f36460.pdf.

would be needed. The Proposed Project includes building a new Alberhill 500/115 kV Substation with two 500/115 kV transformers (the ultimate configuration will have four transformers, three for load carrying and one spare for emergency), looping the existing Serrano-Valley 500-kV line into the new Alberhill Substation, constructing a new 115-kV line and upgrading four existing 115-kV lines. SCE also evaluated other alternatives including the two alternatives below:

1. Install an additional 500/115 kV transformer at Valley Substation. SCE rejected this alternative citing that there was no room at the Valley Substation for an additional transformer and it is impossible to expand the Valley Substation.

2. Transfer load from Valley South system to Valley North system. SCE rejected this alternative because it is a short term solution.

The CAISO Board memo, dated December 9, 2009, estimated that the Proposed Project would cost $315 million.

BAMx Assessment

DEIR Includes Inappropriate Objective of Constructing a New 500/115-kV substation

The DEIR includes the following as one of the objectives of the Proposed Alberhill Project.[5]

- Construct a new 500/115-kV substation within the Electrical Needs Area that provides safe and reliable electrical service pursuant to NERC and WECC standards

BAMx does not believe it is appropriate to indicate one particular solution as an objective to solve a specific reliability issue.

Declining Forecast of Future Loads Reduces the Need for the Proposed Project

The Proposed Project is based upon addressing the reliability problem caused by the projected high load growth in the Valley South area. However, if the load growth is smaller, in line with the rest of the SCE system, then the rejected alternatives should be reconsidered.

The figure below compares the historical (recorded) peak load of the Valley South system with the 1-in-5 year peak load projected in the SCE PEA[6] as well as the DEIR[7]. This figure highlights that the SCE 2009 1-in-5 peak load forecast (green line) is consistently higher than the latest projected 1-in-5 peak demand

---

[3] The two documents discussed in footnote 1 above have different load forecasts. The SCE PEA indicated that the overload would occur on 2011 (See SCE PEA, Table 1.1 Valley South 115-kV System Capacity and Peak Demand. P. 1-6), while the CAISO document indicated the overload would occur on 2014.

[4] SCE has installed a spare 500/115 kV transformer at Valley Substation for emergency conditions.

[5] DEIR p. 1-10.

[6] Proponent's Environmental Assessment Alberhill System Project, p. 1-6

[7] DEIR, p. 1-7.

reported in the DEIR (purple line). It would therefore be erroneous to use the SCE 2009 1-in-5 peak load forecast for planning purposes when newer information is available.

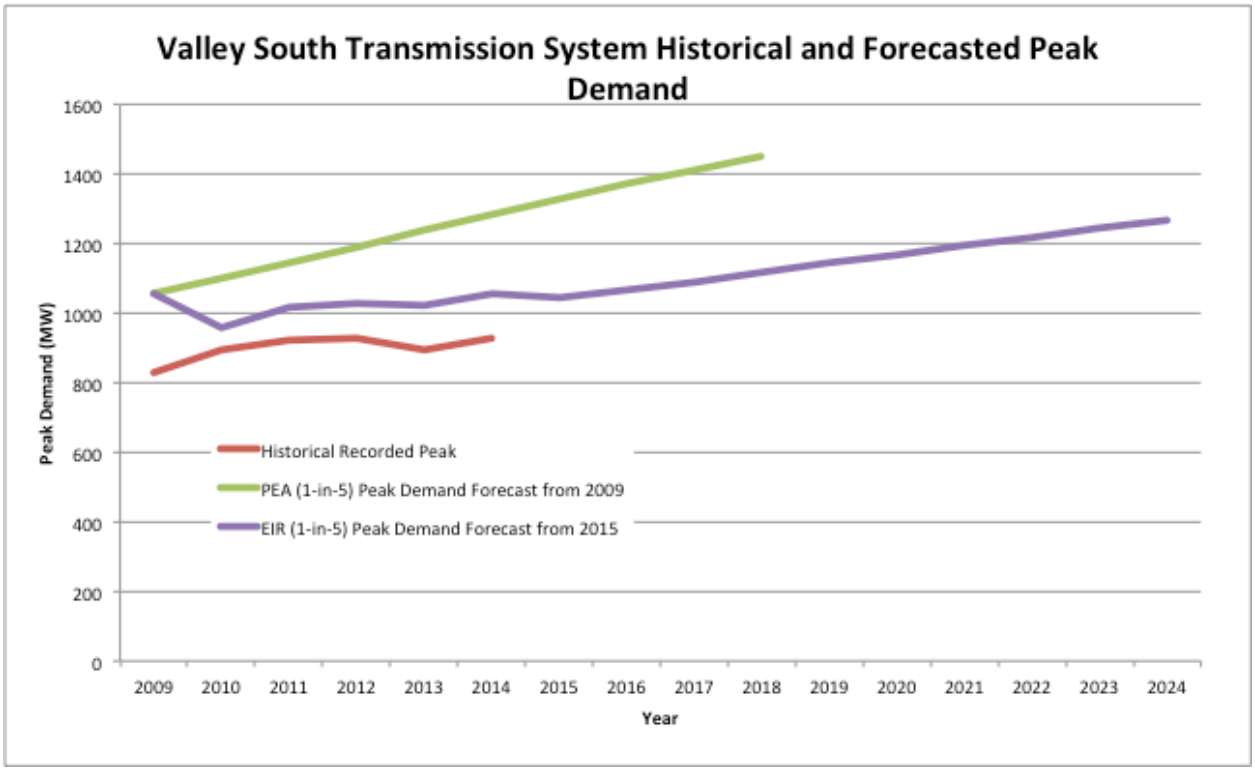

The combined Valley North and Valley South load in 2020 as projected in the CAISO 2015-16 TPP is 1,911 MW[8]. The capability of the four 500/115 kV transformers in the Valley Substation is 2,240 MW. So there is adequate transformer capacity left for load growth. Based upon the latest load forecast, the alternative of shifting load between Valley North and Valley South should be considered as a much longer-term solution than SCE has argued in the PEA. To our knowledge, SCE has not optimized the load shifting process. The 300 MW of unused transformer capacity should be sufficient at least through 2025.

Furthermore, under SB 350, Additional Achievable Energy Efficiency (AAEE) will have a significant role to play in reducing the energy demand. SB 350 also encourages additional preferred resources, especially demand response, to meet the State's 50% RPS goal, the impact of which would likely be reflected at the load centers in the Riverside County. Since the Proposed Project is justified based on the growing loads in the Valley South area, the Commission should take into account this recent development while deciding on the need for the Proposed Project.

[8] CAISO 2015-16 TPP: SCE Summer Peak Metro power flow case.

SCE Needs to Model the 115-kV Network

The Final EIR should provide a load flow analysis of both the Valley North and Valley South networks with all the associated transmission equipment. SCE did not model the Valley South 115-kV network in the load flow cases used to conduct CAISO's annual transmission planning process[9]. Instead of modeling the 11 substations and the corresponding circuits, only one substation with the equivalent load was modeled. Without having the 115-kV network modeled in the load flow base cases, it is impossible to assess the need for either the Valley-Ivyglen project, the 115-kV reinforcements associated with the Proposed Project, or the capability to shift the load from the Valley South to the Valley North transformers.

Need to Fully Evaluate Less Environmentally Impactful Project Alternatives

BAMx appreciates the CPUC efforts to evaluate various project alternatives in order to identify the one with the least environmental impact. BAMx has also identified additional alternatives that could meet the goals identified in the DEIR. These alternatives are expected to have less of an environmental impact and cost less than the Proposed Project. The BAMx-proposed alternatives are listed in the subsections below. Implementing these alternatives in conjunction with the Valley-Ivyglen 115-kV network project would potentially help solve the loading issues identified on the Valley 500kV transformer banks. BAMx urges the final EIR to evaluate these alternatives in addition to the alternatives already evaluated in the DEIR.

Transfer Load from Valley South to Valley North

The alternative of transferring load from Valley South to the Valley North substation should be considered in the DEIR. Based on the loads shown in the CAISO 2015-16 TPP power flow case (SCE 2020 Summer Peak), it might be feasible to transfer up to 240MW of load from Valley South to Valley North without overloading the Valley North transformers.

Connecting Valley North and Valley South Networks on the 115-kV Side

BAMx urges the Commission to explore the option of interconnecting Valley North and Valley South Networks in the final EIR. This option is likely to be less environmentally impactful than the Proposed Project and will likely cost less than the Proposed Project. Also, interconnecting the 115-kV networks would increase the overall reliability of the load served from the substations connected to the 115-kV networks.

Expanding the Valley Substation

SCE has argued that there was no room in the Valley Substation to accommodate another transformer. However, the DEIR does not include any independent assessment of SCE's claim. BAMx requests the Commission to consider another alternative of expanding the Valley South substation to include an additional transformer to be evaluated in the final EIR. The DEIR states that the spare 500/115kV transformer at the Valley South substation will be placed in-service as a temporary solution in case the Alberhill substation project is not built before the loading of Valley South network exceeds the capacity

[9] CAISO 2015-2016 TPP, SCE Summer Peak Base Cases.

of two existing transformers at the Valley South substation[10]. If SCE implements this temporary solution and adds an additional spare at the Valley South substation, that alternative would be less costly and less environmentally impactful than the construction of a new substation. Outages on 500kV transformers are extremely rare and if there is a spare transformer available on site, the loss of load exposure should be about the same as compared to the Proposed Project.

SCE has previously stated that they are unable to extend the Valley Substation due to the roads surrounding the substation. The geographical drawing shown below shows that there is land available to the south and to the west of the substation. Also, there might be an empty breaker bay where the new transformer can interconnect. SCE's claims that it cannot extend the existing substation need to be investigated.

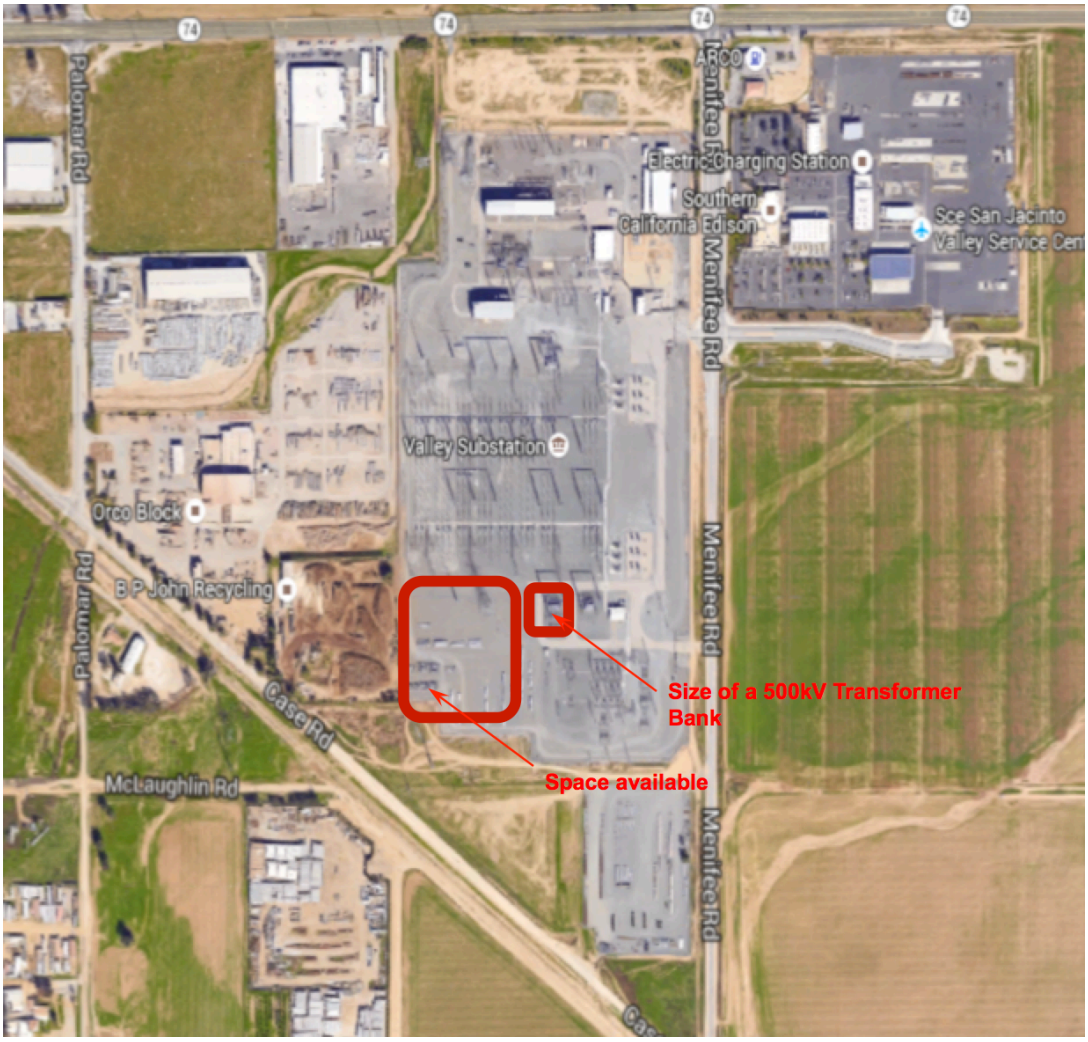

[10] Draft EIR, Introduction (pp. 1-5)

Conclusion

BAMx appreciates the opportunity to provide these comments to the Commission. It is imperative that the state's electricity infrastructure provide safe and reliable electricity to the state's homes and businesses. However, in doing so, it is critical that all proposed applications are presented to the Commission for complete review in a manner consistent with the Commission's general orders and rules, and that the state's ratepayers not be burdened with costs for facilities and projects that are not necessary.

Midbust, Jessica

From: Evelyn Heidelberg <eheidelberg@cgs3.com>
Sent: Thursday, July 14, 2016 3:21 PM
To: VIG/ASP
Cc: Uchida, Jensen
Subject: BBG KRG, Inc. letter to PUC re DEIR on Alberhill System Project
Attachments: BBG KRG letter to PUC re DEIR - 07-14-16.pdf

Attached please find comments on the Draft Environmental Impact Report on the Alberhill Project.

Evelyn F. Heidelberg

Crosbie Gliner Schiffman Southard & Swanson LLP
12750 High Bluff Drive, Suite 250
San Diego, California 92130
858.779.1718
eheidelberg@cgs3.com



LinkedIn | Twitter | Google+

Visit our new website: www.cgs3.com

CROSBIE GLINER SCHIFFMAN SOUTHARD & SWANSON LLP
Attorneys at Law
12750 HIGH BLUFF DRIVE, SUITE 250
SAN DIEGO, CALIFORNIA 92130
TELEPHONE (858) 367-7676
FACSIMILE (858) 345-1991

WRITER'S E-MAIL ADDRESS
eheidelberg@cgs3.com

WRITER'S DIRECT PHONE NO.
(858) 779-1718

OUR FILE NO.
B0036-004

July 14, 2016

VIA EMAIL (VIG.ASP@ene.com)

California Public Utilities Commission
RE: VIG/ASP
c/o Ecology and Environment, Inc.
505 Sansome Street, Suite 300
San Francisco, California 94111

Re: Draft EIR on the Alberhill System Project

Dear Sir or Madam:

On behalf of our client, BBG KRG, Inc. ("BBG-KRG"), we submit the following comments on the Draft EIR for the Valley-Ivyglen Project and the Alberhill System Project (hereinafter, "DEIR"). BBG KRG is the owner of the property that is identified in the DEIR as Alternative DD for the location of the Alberhill Substation.

I. OBJECTION TO TIMING OF NOTIFICATION THAT ALTERNATIVE DD HAD BEEN BELATEDLY SELECTED FOR EVALUATION IN THE DEIR

BBG KRG did not learn that its property was being considered as an alternative site for the Alberhill Substation until after the DEIR was released in May 2016. As an initial matter, BBG KRG objects to the fact that it was not notified earlier in the environmental review process that its property was being considered by the PUC as an alternative site for the Alberhill Substation.

Alternative DD was not among the 33 sites evaluated for the Alberhill Project in the Alternatives Screening Report that was prepared by Ecology and Environment for the PUC and released in August 2015. As indicated in the brief (11-page) "Addendum to the Valley-Ivyglen and Alberhill Project EIR Alternatives Screening Report," issued in February 2016 (hereinafter, "Addendum"), "two additional alternatives for the Alberhill Project have been identified." Alternative DD was one of the two. As the PUC correctly noted in its May 6, 2015, "Notice of Preparation of an Environmental Impact Report" on the Alberhill Project, "CEQA requires agencies to … inform the public of potential impacts and alternatives, and facilitate public involvement in the assessment process." In light of those CEQA requirements, BBG KRG submits that having identified Alternative DD as an alternative that would be evaluated in the DEIR, the PUC had an obligation to notify BBG KRG, and the public generally, no later than February 2016, that it had belatedly decided to include its property as an alternative in the DEIR. The PUC should have also at that time conducted another public scoping meeting to obtain input on the addition of the two alternatives to the Alberhill Substation Project.

II. THE DEIR'S ADDENDUM TO THE ALTERNATIVES SCREENING REPORT IS DEFICIENT IN THAT IT FAILS TO EXPLAIN HOW ALTERNATIVE DD WAS BELATEDLY SELECTED FOR EVALUATION

CEQA requires that an EIR explain how the project alternatives were selected for analysis. *See* CEQA Guidelines, § 15126.6(c) ("The EIR should briefly describe the rationale for selecting the alternatives to be discussed…."). Neither the DEIR nor the accompanying Addendum explains how and why Alternative DD was selected some time before February 2016 (when the Addendum was released), but after August 2015 (when the Alternatives Screening Report was released). As noted in Section I above, all that is said about the matter in the Addendum is that "[s]ince the completion of the 2015 Alternatives Screening Report, two additional alternatives have been identified." Addendum, at 2. This conclusory statement of fact is not the "rationale" required by CEQA.

III. THE DEIR'S CONCLUSION THAT ALTERNATIVE DD IS THE ENVIRONMENTALLY SUPERIOR ALTERNATIVE FOR THE ALBERHILL SUBSTATION PROJECT IS NOT SUPPORTED BY SUBSTANTIAL EVIDENCE

A. The Legal Standard

CEQA requires that an EIR "include sufficient information about each alternative to allow meaningful evaluation, analysis, and comparison with the proposed project." 14 Cal. Code Regs. (hereinafter "CEQA Guidelines") § 15126.6(d); *see also Laurel Heights Improvement Ass'n v. Regents of Univ. of Cal.* (1988) 47 Cal.3d 376, 406 (analysis of alternatives should be "explain[ed] in meaningful detail") and *Kings County Farm Bureau v. City of Hanford* (1990) 221 Cal.App.3d 692, 733 (absence of comparative data precluded meaningful consideration of alternatives).

The DEIR falls woefully short of meeting this standard. It devotes more than 500 pages to Chapter 4, which – supplemented by numerous appendices comprising at least as many pages – to evaluating the environmental impacts of the applicant's proposed site for the Alberhill Substation and the Valley-Ivyglen Project, but a scant 35 pages to Chapter 5, "Comparison of Alternatives," which purports to be the "meaningful evaluation" CEQA requires of the applicant's proposed project as well as six alternatives to the Valley-Ivyglen Project and three alternatives to the Alberhill Substation. Other than general reference to seven documents (two of which are State of California documents concerning greenhouse gas emissions), there are no technical appendices supporting the DEIR's conclusion that Alternative DD is environmentally superior to the applicant's proposed site for the Alberhill Substation.

B. The DEIR Is Misleading in Evaluating Alternatives As to Resource Areas for Which the Applicant's Proposed Site Will Not Have Significant Impacts

Table 5-2, which purports to summarize the analysis of project alternatives and the determination that Alternative DD is the environmentally superior alternative, is misleading insofar as it includes 11 resource areas as to which the applicant's proposed site for the Alberhill Substation would have less than significant impacts, either with or without mitigation. By including those 11 resource areas, Table 5-2 identifies Alternative DD as being the "environmentally superior alternative" as to six resource areas, when three of those six resource areas are irrelevant to the alternatives analysis. This is the case because the DEIR finds that the applicant's proposed Alberhill Substation site would have significant and unavoidable impacts only as to three resource areas: (1) aesthetics; (2) air quality; and (3) and noise and vibration. (DEIR, at 5-24.) Under CEQA, as the DEIR concedes, the purpose of an alternatives analysis … is to identify feasible alternatives that would attain most of the basic objectives of the project being proposed ***while avoiding or substantially reducing at least one of its significant effects***." (DEIR, at 5-1, citing Pub. Res. Code § 21002 (emphasis supplied).) Accordingly, if the project as proposed would have ***insignificant*** impacts on 11 other resource areas, it is immaterial under CEQA that alternatives to the proposed project would have reduced impacts on those 11 other resource areas, because CEQA's alternatives analysis is intended to avoid the proposed project's ***significant*** impacts. So it is immaterial that Alternative DD would allegedly have "reduced" impacts on biological resources, public services and utilities, and transportation and traffic, since the project located at the site proposed by the applicant would not have significant effects on those resources.

In addition, as to one of the three resource areas as to which the project as proposed by the applicant would have a significant and unavoidable impact – air quality impacts during construction – the DEIR concludes that Alternative DD would have "similar" impacts. (DEIR, at 5-24.) And, as to noise and vibration impacts, as to which Alternative DD is claimed to have "reduced" impacts as compared to the applicant's proposed project site, the noise and vibration impacts are temporary, as they would occur solely during the construction process. Accordingly, the DEIR's evaluation of alternatives to the Alberhill Substation actually concludes that Alternative DD is purportedly "environmentally superior" as to impacts on only one resource area – aesthetics – and one resource area on a temporary basis, noise and vibration during construction. This conclusion is not evident either from a quick review of Table 5-2, nor from a review of Chapter 5.

Moreover, the DEIR's conclusion that Alternative DD is "environmentally superior" on account of aesthetic considerations is not supported by the facts. The DEIR states that a substation located at Alternative DD would be "mostly shielded" from I-15 by existing topographic features located east of I-15 (DEIR, at 5-28.) Although a ridge now located on the western part of the

Serrano Commerce Center property would shield views of a substation located at Alternative DD from the I-15 segment that immediately abuts that property to the west, other segments of I-15 – specifically, those to the north and the south of the Serrano Commerce Center property, afford plain views of a substation (and associated transmission lines) located at Alternative DD. Moreover, the ridge that now would "mostly shield" a substation located at Alternative DD from views from the immediately abutting segment of I-15 will be lowered by 80 to 120 feet as part of implementation of Riverside County Specific Plan No. 353 (adopted in September 2010) for the development of the Serrano Commerce Center (hereinafter, the "Serrano Specific Plan" or "SSP"). (See SSP, II-37.)

C. The DEIR Fails to Address Potential Impacts of Locating the Alberhill Substation and Associated Transmission Towers and Lines at Alternative DD

As noted above, Alternative DD is located on property that is covered by the SSP, encompassing 489 acres. As the Final EIR for the SSP makes clear, the SSP was carefully designed (including dozens of mitigation measures) to avoid or reduce impacts to sensitive water, biological, cultural, recreational and other resources within and adjacent to the area encompassed by the SSP.

The DEIR for the Alberhill Substation utterly fails to address how location of the substation and associated transmission towers and lines would affect the integrity of the SSP, including but not limited to the ability to implement the approved land uses and the dozens of required mitigation measures. The attached letter from L & L Environmental, Inc., which has served as the environmental consultant for biological, archeological, paleontological and water quality issues on the area encompassed by the SSP from 2002 through the present, identifies many of the issues that should have been addressed in the DEIR's evaluation of Alternative DD, but were not.

The L & L Environmental letter also identifies many potential impacts of locating the Alberhill Substation and associated transmission towers and lines at Alternative DD on the existing mining operations on the area encompassed by the SSP. These potential land use and resource impacts should have been addressed in the DEIR, but were not.

In addition, the DEIR fails to provide any information as to how access would be provided to the Alternative DD site, which presently lacks any such access. The land use, transportation, and air quality impacts of providing unspecified access to that site, unless the access is presumed to be identical to that included in the Serrano Commerce Center, in which case those impacts may be (but may not be) consistent with the Final EIR for the SSP.

Also with respect to potential land use impacts of Alternative DD, the DEIR should include an analysis of the land use impacts of removing 42.9 acres (assumed to be needed for the Alberhill

Substation if constructed at Alternative DD) from the SSP. In addition to the 42.9 acres claimed to be needed for the substation if located at Alternative DD, siting the Alberhill Substation at Alternative DD may limit development of the remaining parcels comprising the Serrano Commerce Center, e.g., through easements needed for transmission lines and to ensure public safety. Those potential land use effects should be discussed in the DEIR.

In summary, BBG KRG submits that the DEIR's analysis of the potential environmental impacts of locating the Alberhill Substation at Alternative DD is cursory and incomplete, and its conclusion that Alternative DD is the "environmentally superior" alternative is flawed. Accordingly, the DEIR is inadequate under CEQA to support a decision by the PUC to approve Alternative DD as the site for the Alberhill Substation.

Sincerely,



Evelyn F. Heidelberg

EFH:ka
Attachment

L&L ENVIRONMENTAL, INC.
REGULATORY SERVICES
BIOLOGICAL & CULTURAL INVESTIGATIONS & MONITORING

July 12, 2016

Evelyn F. Heidelberg
Crosbie Gliner Schiffman Southard & Swanson LLP
12750 High Bluff Drive, Suite 250
San Diego, California 92130
858.779.1718
eheidelberg@cgs3.com

REGARDING: COMMENTS ON THE SOUTHERN CALIFORNIA EDISON ALBERHILL SUBSTATION DRAFT ENVIRONMENTAL IMPACT REPORT, ALTERNATIVE DD.

L&L Environmental, Inc. (L&L) is the environmental consultant for biological, archaeological, paleontological, and regulatory agency / jurisdictional analysis on the Serrano Specific Plan (SSP) and has been active on the property for 14 years covering the period of 2002 through 2016. Our services include studies and general support services for both the SSP entitlements and the on-going Ben's Mine/Serrano Clay Mine currently operating on a portion of the property encompassed by the SSP. As a part of our actions, we have reviewed the Draft Environmental Impact Report (DEIR) and maps for the Alternative DD of the proposed Southern California Edison (Edison) Alberhill Substation, Transmission Towers, and Lines Project.

L&L has also provided services to the Eagle Glen Specific Plan and the Retreat Specific Plan, as well as several other projects in the area including: Renaissance Ranch, the Walecki Residential Project, the Ivy Glen Project, Tom's Farm, portions of the Wild Rose Residential and Commercial Development, Infrastructure Related to the Lee Lake Water District and the Village Specific Plan, etc. Due to our long-term association with the Temescal Valley and more specifically the SSP and Ben's Mine/Serrano Clay Mine, we were asked to summarize issues raised by the DEIR for the Edison Alberhill Substation pertaining to the analysis of locating the substation at Alternative DD (LNI CV, attached).

Celebrating 20 Years of Service to Southern CA and the Great Basin, WBE Certified (Caltrans, CPUC, WBENC)
Mailing Address: 700 East Redlands Blvd, Suite U, PMB#351, Redlands CA 92373
Delivery Address: 721 Nevada Street, Suite 307, Redlands, CA
• Phone & 909-335-9897 • & 909-335-9893

The comments are listed below in two (2) general categories; the SSP and Ben's Mine/Serrano Clay Mine; and four (4) resource areas, including biological, archaeological, paleontological, and regulated drainages or riparian riverine features. We hope this information will be useful in outlining the analysis that should be undertaken in connection with Alternative DD.

The Serrano Specific Plan

The SSP covers 489 acres overlooking and paralleling the Temescal Wash, segments of which are a protected waterway under Section 303 of the Clean Water Act (33 U.S.C §1251). The area encompassed by the SSP also includes several territories of the federally endangered least Bell's vireo (*Vireo bellii pusillus*; LBV), a historic railroad alignment, significant cultural resources, including a prehistoric rock art feature, the remains of a historic adobe and vineyard, habitat for the coastal California gnatcatcher (*Polioptila californica californica*; CAGN) a Species of Special Concern in California and federally Threatened, and narrow endemic soils capable of supporting sensitive botanical species. Portions of eleven (11) waterways that have been determined to be "waters of the United States" under the jurisdiction of the U.S. Army Corps of Engineers (ACOE) pursuant to the Federal Clean Water Act are present in the area encompassed by the SSP. Sensitive habitats are present within these streambed resources, including alluvial fan sage, a protected/imperiled habitat under the Riverside County Multiple Species Habitat Plan (MSHCP) and the California Department of Fish and Wildlife (CDFW).

The SSP entitlements were carefully designed to avoid and minimize impacts to sensitive resources and mitigate unavoidable impacts. As a result of the presence of these sensitive resources, the horizontal and vertical impacts allowed under the SSP are highly constrained. A critical part of the development plan is the restoration of the floodplain on the northern limits of the area subject to the SSP, which was altered during past developments located to the north of the SSP. Another critical aspect is the avoidance of impacts to the Temescal Wash and the special-status species associated with the wash.

Edison Substation Development and the Serrano Specific Plan

The Edison Alberhill DEIR indicate that Alternative DD would locate the proposed substation on lands planned for use by the SSP, more particularly, approximately 42.9 acres in Planning Area 5 at the northeastern section of the area covered by the SSP. Siting the Edison Alberhill Substation at this location would:

1. Interfere, alter, or prevent the SSP from implementing mitigation measures that offset impacts to regulated streambeds, as governed by the CDFW under Fish and Game Code section 1600 et seq., Waters of the State, as governed by the Regional Water Quality Control Board (RWQCB), and Waters of the U.S., as defined and regulated by the Clean Water Act and managed by the ACOE. This interference with or alteration of required mitigation measures would occur by constraining the physical placement of the development pursuant to the SSP and /or the planned avoidance of regulated streambeds, and the SSP mitigation measures via the restriction or elimination of lands planned for restoration as Waters of the U.S. and State (mitigation plan). The SSP FEIR (page 7) states the planned mitigation, which includes the creation of 7.27 acres of soft bottom channel, will occur primarily in Coldwater Canyon. While these lands are not immediately within Planning Area 5, they are immediately adjacent to Planning Area 5 and partially within Planning Area 12 (Open Space and Conservation Area). The direct and indirect impact of the Edison Substation to the SSP elevations, horizontal placement, and critical slope design should be addressed for impacts to jurisdictional areas in the Edison Alberhill Substation EIR.

2. Interfere with or remove the ability of the SSP to construct, operate, or maintain the planned underground structural water quality and recycling system which reduces project impacts to the protected Temescal Wash, jurisdictional waters, and Waters of the State and U.S both on and off the project site. The SSP FEIR Section 3: Project Description, pages 3-12 through 22, describe a highly complex and phased water quality treatment and storage system. This includes two structural underground water storage reservoirs, underground connecting pipelines, and surface collection and surface flow channels. The Conceptual Drainage and Phase Plan (SSP FEIR, figures 3-7 / pages 3-15) shows the location of one of the reservoirs within Planning Area 5 and one immediately adjacent in Planning Area 6. It is clear from an examination of this design that the proposed Edison Substation if located at Alternative DD, would directly impact a large portion of this system. This will change the balance of offsetting and minimization of impact measures for the SSP. The consequence of this impact should be addressed in the Edison Alberhill Substation EIR.

3. If the underground water quality basin (WQB) and recycling system cannot be constructed due to the placement of the Edison Alberhill Substation at the Alternative DD site, the SSP may not be able to utilize or economically store the volume of rock that will be generated by the SSP construction grading operation. The SSP FEIR page 3-27

describes the placement of this material in the constructed fills. The inability to use the rock generated during the grading operation as structural fill for the WQB would dictate the balance of the cut and fill operation, causing the material to be trucked to and from off-site locations. If materials were exported from the SSP, this would change the balance of the air quality calculations (SSP FEIR pages 4.1 48 through 49 and page 4.4-13), the fiscal analysis (SSP FEIR page 4.1-48), and the Temporary Construction Impacts on Traffic / Roads (SSP FEIR page 4.4-23 and 4.4-25). It would also affect the vertical placement or constructed elevation of the build-out for the SSP (SSP FEIR page 37). A major concern in the design of the SSP was to control the grade (vertical rise) of the relocated Temescal Canyon Road, which bisects the planned SSP development. The percent grade increase over the relatively short project distance will affect the ability of the Temescal Canyon Road to support heavy loaded trucks through the Serrano Commerce Center. One main beneficial effect of the SSP is a solution to a major localized traffic issue on the existing Temescal Canyon Road. Building the Edison Substation at this location could impact the development of this planned road improvement. The Edison Alberhill Substation EIR should include an analysis of these direct, indirect and cumulative potential impacts created by potential elevational changes to the SSP design.

4. If the ending or constructed elevation of the SSP changes, it could impact the avoidance and minimization measures designed to prevent direct and indirect impacts to seven (7) known territories of LBV. Page 4.6-12, of the SSP FEIR discusses twenty-two (22) acres of suitable habitat for LBV, and one pair of LBV were observed within this area. Six (6) LBV territories were detected immediately adjacent to the SSP within the Temescal Wash. During early consultations with the Riverside Conservation Authority and the wildlife agencies (United States Fish and Wildlife Service /CDFW), a concern for setback and elevational distance was received. As a result of those consultations, the SSP was revised to offset potential noise from construction activities, as well as post-development noise, which could impair reproductive behaviors of the LBV. Any change to the design elevation and setback distances set forth in the SSP that may be required if the Edison Alberhill Substation were located at Alternative DD should be analyzed for the potential to impair the long-term survival of the LBV. The direct, indirect and cumulative impacts to the LBV should be addressed in the Edison Alberhill Substation EIR.

5. If the ending or constructed elevation of the SSP were to change as a consequence of the Edison Alberhill Substation being located at Alternative DD, it would impact the ability of development within the Serrano Commerce Center to prevent human contact with or public knowledge of significant cultural resources. During the approval of the SSP, measures were designed to provide a physical barrier which would be located immediately adjacent to Alternative DD. The suitability of Alternative DD and the potential for impacts to sensitive cultural resources should be evaluated by the Pechanga Band of Luiseño Indians (Tribe). The SSP FEIR contains an extensive and detailed comment letter (SSP FEIR, pages 20-27) which explains the importance of the SSP lands to the tribe. Expressed concerns include potential impacts to two known Luiseño village complexes (Tuu' uv and Paxavxa) and toota yixelval (rock art, pictographs, and petroglyphs) which are present in the Temescal Valley and specifically in SSP area. The exact location of these resources can not be circulated in a public document but the potential impact should be addressed in the Edison Substation EIR. Several consultations will occur during the development of the SSP lands. The tribe's letter mentions one in their assertion that they should be involved in any regulatory permits (which would be a Section 106 Consultation at the Federal Level). Not mentioned in the Tribe's letter is AB52 (California State Legislation) which postdates the SSP entitlements. Under this legislation, any new application for entitlements would open consultation with <u>any</u> interested Tribe. The direct and indirect consequence of this action could substantially change the SSP entitlements. The potential impacts of selection of Alternative DD on the referenced cultural resources should be addressed in the Edison Alberhill Substation EIR.

6. Development within the area encompassed by the SSP will require a Clean Water Act section 404 permit to address the impacts to Jurisdictional Waters of the U.S. During this process, due to the co-occurrence of a federally listed (Endangered Species Act [ESA]) species, a US Fish and Wildlife / Army Corps of Engineers Section 7 consultation will be required. At that same time, because of the presence of cultural resources a Section 106 (National Historic Preservation Act Consultation) between the ACOE and the State Historic Preservation Officer will be required. Regulatory permits are not in place at this time, and consequently, consultations have not occurred for the SSP. Any such consultation between Edison and the regulatory agencies in connection with the development of the Alberhill Substation at Alternative DD could dramatically affect the proposed consultations to support planned development under the SSP. The sequence

and the consequence of this action should be addressed in the Edison Alberhill Substation EIR.

7. SSP Planning Area 5 contains at least one recorded location of the common fairy shrimp species, Versatile fairy shrimp (*Branchinecta lindahli*). Two other listed species, Riverside fairy shrimp (*Streptocphalus woottoni;* federally Endangered) and vernal pool fairy shrimp (*Branchinecta lynchi*; federally Threatened) have a potential to occur within the SSP (SSP FEIR page 4.6-13) More recent studies conducted within the SSP found the Versitile fairy shrimp within Planning Area 5 and concludes that Planning Area 5 is within the known range of the S woottoni (RECON 2013). Impacts to the fairy shrimp were not addressed in the Edison Alberhill Substation EIR and should be analyzed as a part of the public review process. Impacts to jurisdictional vernal pools require permits under the Clean Water Act Sections 401 and 404. The direct impact to occupied pools as well and the potential for listed branchiopods to occur should be addressed in the Edison Alberhill Substation EIR.

8. The inclusion of the Edison Alberhill Substation within the boundary of the SSP would increase the cumulative, direct and indirect impacts to ESA/sensitive biological resources and impact the SSP avoidance and minimization/mitigation measures, related archaeological resources, and regulated waters, thereby changing the analysis of those cumulative impacts and the ability of the SSP to obtain regulatory permits prior to development (SSP FEIR page 4.6-14-15). The direct and indirect consequence of this action should be addressed in the Edison Alberhill Substation EIR.

9. The inclusion of the Edison Alberhill Substation at Alternative DD would change the SSP project description and could force a reevaluation of the amended SSP project under the FEIR for the SSP, which is the basis for obtaining regulatory permits for development pursuant to the SSP. CDFW will require the project description in the CEQA document to match the project description in the Lake and Streambed Alteration Agreements (SSP FEIR, Section 3-1). An analysis of the potential impact of the selection of Alternative DD on the entitlements of the SSP should be addressed in the Edison Alberhill Substation EIR.

10. At least a portion of the area encompassed by the SSP sits on the Silverado Formation, which is known to yield fossil resources (SSP FEIR, pages 2-9). The South Corona area underwent alternating periods of marine coverage and terrestrial exposure. Areas immediately adjacent to the SSP have yielded high quality and quantity of fossils of both

marine and terrestrial origin. Specifically, the Retreat Specific Plan and the Chase Ranch Specific Plan contained fossilized material from freshwater ponds (turtle and fish), forest and wetlands (leaves), and marine (shark and pinnipeds) terrestrial mammals (bison, camel, horse, and rodents) among others. An analysis of the potential for direct impacts to these resources should be included in the Edison Alberhill Substation EIR.

Edison Transmission Towers and Lines and the Serrano Specific Plan

In addition to the direct and indirect impacts to the SSP resources and entitlements from locating the Edison Alberhill Substation at Alternative DD as outlined above, environmental impacts from the Transmission Towers and Lines should also be considered, given the following:

1. The Transmission Towers and Lines would directly, indirectly, and cumulatively impact a protected water body, the Temescal Wash, within and adjacent to the SSP lands. The impact to avian species (LBV) was not addressed as stated above, nor was water quality impacts related to the construction and maintenance of these facilities. These matters should be addressed in the Edison Alberhill Substation EIR.

2. The Transmission Towers and Lines would affect vertical and horizontal clearances and control future development under and around these structures. Alterations to vertical and horizontal clearances may significantly affect the SSP entitlements, and therefore should be addressed in the Edison Alberhill Substation EIR.

3. The Transmission Towers and Lines would affect the functions and values of the habitat within and adjacent to the area encompassed by the SSP, and would impact the balance of the avoidance, minimization, and mitigation measures planned for the SSP. These issues were not addressed in the Edison Alberhill Substation EIR.

4. The Transmission Towers and Lines may affect the location of that portion of the planned County trail system located in Planning Area 12 of the SSP (which forms the entire northern boundary of Planning Area 5) and the beneficial uses or functions and values that it offers to the community. Certain uses may not be suitable under these lines or adjacent to these towers, and for that reason, the location of the Transmission Towers and Lines associated with locating the Edison Alberhill Substation at Alternative

DD may have an impact on the horizontal and vertical design of the SSP. These issues should be addressed in the Edison Alberhill Substation EIR.

5. The Transmission Towers and Lines would limit and change the development footprint within the area encompassed by the SSP, impacting the overall buildout of the Serrano Commerce Center and the balance of the avoidance and mitigation measures required as part of the FEIR for the SSP. These issues should be addressed in the Edison Alberhill Substation EIR.

6. The Transmission Towers and Lines may affect SSP access and circulation patterns, which may alter the avoidance and minimization measures, as well as the calculations for transportation/traffic impacts. These actions could affect the off-setting noise measures related to the LBV and jurisdictional areas. These issues should be addressed in the Edison Alberhill Substation EIR.

7. The Transmission Towers and Lines could directly affect the agreement to avoid direct and indirect impacts to the sacred and cultural resources discussed above, including a significant rock art panel. These issues should be addressed in the Edison Alberhill Substation EIR.

Ben's Mine/Serrano Clay Mine

Ben's Mine/Serrano Clay Mine is located on a parcel of 280± acres, portions of which are situated within the area encompassed by the SSP overlooking and paralleling the Temescal Wash, which is a protected waterway under Section 303 of the Clean Water Act. It also includes several territories of the federally listed (ESA) LBV, a historic railroad alignment, a significant prehistoric rock art feature, the remains of a historic adobe and vineyard, habitat for the CAGN, and narrow endemic soils capable of supporting sensitive botanical species. The mine is surrounded by jurisdictional waterways and sensitive habitats.

The Mine entitlements were carefully designed to avoid and minimize impacts to sensitive resources. Because of the presence of these sensitive resources, the horizontal and vertical impacts allowed by the mining operation are highly constrained. A critical part of the operation of the mine is the ability to retain runoff from precipitation within the mine footprint to avoid potential detrimental downstream impacts to the Temescal Wash and related habitat dependent listed species.

Edison Substation, Transmission Towers, and Lines Development and Ben's Mine/Serrano Clay Mine

In addition to the potential direct and indirect impacts to the lands entitled as the SSP, the Edison Alberhill Substation EIR fails to consider the continued use and potential closure costs related to the clay soils and the active Ben's Mine. Ben's mine is contained within planning area 5 and 6..Any planned impact to the physical location of Ben's Mine would need to be analyzed for potential consequences related to at least the following issues:

1. Locating the Edison Alberhill Substation and associated Transmission Towers and Lines at Alternative DD would affect the quantity, quality, and type of material available for mining at Ben's Mine and would result in a loss of that resource to the community. This could have an additional impact on biological and cultural resources as the mining operation is displaced and forced to explore for other clay soils. The operation of Ben's Mine is regulated under the California Surface Mining and Reclamation Act (SMARA) and governed by the Office of Mining Reclamation regulations and Riverside County ordinances. While the SSP FEIR addresses the loss of these materials to the community (SSP FEIR, pages 4.1-12 and 13) it of course, does not address the potential use of a portion of the area being mined as the Edison Alberhill Substation and associated Transmission Towers and Lines. The sequence and the consequence of these matters should be addressed in the Edison Alberhill Substation EIR.

2. Locating the Edison Alberhill Substation, Transmission Towers, and Lines at Alternative DD would make the production of mining materials required for local suppliers of pipe and roofing tile, etc., difficult or potentially impossible. The SSP FEIR (pages 4.1-12 and 13) allows for a progressive use of the mine as the Serrano Commerce Center is developed. Area 5 of the SSP contains the mine access control point and roads as well as the access roads for the northern portion of the SSP. Locating the planned Edison facilities in Planning Area 5 would cut off access to the mine and portions of the greater property. Analysis of the business disruption and alternative access design impacts should be considered in the Edison Alberhill Substation EIR, and the direct and indirect effect of locating the referenced Edison facilities at Alternative DD on the ongoing mining operation and property access should also be addressed.

3. If the Edison Alberhill Substation, Transmission Towers, and Lines were located at Alternative DD, they would impact the reclamation plan/operating plan for the mine. The SSP FEIR, (pages 4.1-12 and 13) discloses the existence of an active mining permit and a SMARA County of Riverside approved Mine Reclamation Plan, as amended. Both SMARA and the County of Riverside require the mine boundary and the end use to be disclosed and addressed in the approved plan and permit. The extent and consequences of the planned Edison facilities on the existing mining approvals, materials, and documents were not addressed in the Edison Alberhill Substation EIR. The Edison Alberhill Substation EIR analysis should include both the direct and indirect impacts of the planned facilities on the existing mining plan and approvals. The consequences of any required changes to the operating plans and approvals for the mine should be fully disclosed to the public and considered in the EIR.

4. The Edison Alberhill Substation, Transmission Towers, and Lines will affect project phasing and mine closure (SSP FEIR pages 4.1-12 and 13). The consequence of this action should be addressed in the Edison Alberhill Substation EIR.

Sincerely,
L&L Environmental, Inc.

Leslie Nay Irish
Principal

LNI/jms



Leslie Nay Irish
Principal Analyst / CEO

(909) 335-9897
Lirish@llenviroinc.com

QUALIFICATIONS

Leslie Irish has extensive multi-disciplinary experience in environmental, engineering/ architectural, land development and construction management and administration with more than 25 years' experience as a project manager on public and private NEPA/CEQA projects overseeing the areas of biology, archaeology, paleontology, regulatory services, and state- and federal-level permit processing. She has been active in the consulting/construction industry for 30 years and has maintained an ongoing education including environmental, wetland delineation and management certificates; and archaeology, geology, botany, revegetation, land planning, construction law, and biology classes.

Ms. Irish's responsibilities include direct contact with project proponents, scientists and agencies. She has a complex understanding of the industry from various perspectives and is involved in all aspects of the project from request for proposal to project completion. Ms. Irish is certified to perform wetland / jurisdictional delineations and holds a responsible party permit for performing archaeological and paleontological investigations on (BLM) public lands. She actively participates in the installation and monitoring of revegetation programs and the development of mitigation plans. Her principal office duties include review of all environmental documents authored by the firm; oversight of regulatory permits, agency consultation and negotiations; impact mitigation review; and long-term permit compliance. Her field duties are more limited but include delineations, compliance monitoring and reporting (coordination), constraints analysis, planning for corrective measures, and resolution of "problem projects".

Ms. Irish has played a key role in the development of more than 800 projects in southern California.

EXPERTISE & SPECIALIZATION

- CEQA/NEPA environmental planning and compliance
- Archaeological, paleontological and biological mitigation and monitoring
- Wetland/jurisdictional delineations
- Revegetation planning, installation and monitoring
- Regulatory permit processing (local, state and federal levels)

SIGNIFICANT PROJECTS

Brasada Development, San Dimas:
Development 1 Group, Inc.
Archaeo/Paleo/Bio/regulatory processing, Compliance Reporting

Golden Meadows/Menifee Assemblage Development, Menifee:
Richland Communities
Archaeo/Paleo/Bio/regulatory processing, Compliance Reporting

I-15 Temescal Valley Experience
Archaeo/Paleo/Bio/regulatory processing, Compliance Reporting

The Retreat Specific Plan
Eagle Glen Phases 1-3
Renaissance Ranch
Tom's Farm
Glen Ivy
Walecki TTM
Chase Ranch
South Corona Emergency Services
Serrano Specific Plan
WildRose Business Park
Toscana
The Village

Ben's Mine, Corona:
Mission Clay Products
SMARA compliance

CREDENTIALS

- **Certificate Cal Trans WBE Business Certification (CT) 022889**
- **Certificate Advanced Wetlands Delineation and Management: ACOE, 2001**
- **Certificate Wetlands Delineation and Management: ACOE, 1999, No. 1257**
- **Permit for Archaeology on Federal Lands Responsible Party: USDI, Permits CA-10-19 & CA-10-00-005P**
- **MOU & Qualified Consultant List (as amended) for Archaeology, Biology, Paleontology and Wetlands ID/Delineation 1996-2014 County of Riverside, California**
- **Certificate Desert Tortoise Handling Class: DT Consortium / Joint Agencies (USFWS/CDFG), 2008 & 2013**

ADDITIONAL CERTIFICAITONS & EDUCATION

Certificate, Wetlands, Waters Permits and the Courts, July 2016
Certificate, Update to ACOE Wetlands Delineation, 2015 Rule, 2016
Certificate, Wetland Delineation & Management: Chin for ACOE, 2000; Advanced Certificate, 2002
Certificate, Underground Storage Tank Remediation, University of California, Riverside, 1995
Certificate Program, Field Natural Environment: University of California, Riverside, 1993
Certificate Program, Light Construction, Developmental Management: University of California, Riverside, 1987
Certificate Program, Construction Technologies: Riverside City College, 1987
State of California Contractors License School - B-General and C-Specialties (Concrete/Masonry) and General Law sections: Passed School Mini-Board 1986
Core Teaching and Administrative Management, State of California, Title 22 License, Primary (K-3) and Early Childhood Education and Administration: California State, San Bernardino, Lifelong Learning Program, (Active 1973-2005)
Additional Studies in Early Childhood Education, Behavioral Sciences, and Anthropology: Chaffey Jr. College and Valley Community College, 1973-1979
Additional Studies in Botany, Business Law, Accounting, Marketing: Riverside City College 1987 to 2002
Additional Studies Darden School of Business 2014, University of Virginia – Online

RECENT PROJECT MANAGEMENT LEVER CONTINUING EDUCATION UNITS

Project Management, PMBOK Methodology, University Of Virginia, Darden School of Management
Budgeting and Scheduling Projects, University of Virginia, Darden School of Management
Design Thinking for Business Innovation, University of Virginia, Darden School of Management
Foundations of Business Strategy, University of Virginia, Darden School of Management
Initiating & Planning Projects, University of Virginia, Darden School of Management

PROFESSIONAL HISTORY

L&L Environmental, Inc. – Principal, Project Manager / Principal in Charge: 1993-present. Perform site assessments, surveys, jurisdictional delineations, permit processing, agency consultation/negotiation, impact mitigation, project management, coordination, report writing, technical editing, and quality control.
Marketing Consultant – Principal: 1990-1993. Engineering/architectural, environmental, and water resource management consultant.
Warmington Homes – Jr. Project Manager: 1989-1990. Residential development, Riverside and Los Angeles Counties.
The Buie Corporation – Processor/Coordinator: 1987-1990. The Corona Ranch, Master Planned Community.
Psomas & Associates – Processor/Coordinator: 1986-1987. Multiple civil engineering and land surveying projects.
Irish Construction Company – Partner: (concurrently with above) 1979-1990. General construction, residential building (spec. housing), and concrete and masonry product construction.

PROFESSIONAL AFFILIATIONS

2008 - 2014 Redlands Historical Society, Inc. – Board Member, OHG Chair
1998 - 2013 California Chamber of Commerce – Member
2014 CalFlora – Member
2014 Society of Wetland Scientists – Life Member
1994-1997 Business Development Association, Inland Empire – President or Board Member
1993-1994 Building Industry Association, Riverside County – Executive Vice President

SYMPOSIA, SEMINARS AND WORKSHOPS

Organizer and Presenter: Identifying Human Bone: L&L Environmental, Riverside County with Coroner and Page Museum, 2002
Presenter Lessons Learned in Wetland Basin Creation, University of California, Riverside Extension with the Riverside Corona Resource Conservation Authority, 2004

CONTINUING EDUCATION

SMARA – Annual Inspections Workshop: CA Dept. of Conservation, Office of Mine Reclamation, 2010
Bedrock Food Processing Centers in Riverside County: TLMA, 2009
Nexus Geology-Archaeology, Riverside County: TLMA, 2009
Update, Storm Water Management BMPs: University of California, Riverside, Extension, 2005
Ecological Islands and Processes (vernal pools, alkali wetlands, etc.): Southern California Botanists, 2004
Low-Impact Development: State Water Board Academy, 2004
Inland Empire Transportation Symposium: Riverside County BIA, 2004
Western Riverside County MSHCP Review and Implementation Seminar: County of Riverside, 2004
Field Botany and Taxonomy: Riverside City College, 2002
Construction Stormwater Compliance Workshop: BIA, 2002
CEQA/NEPA Issues in Historic Preservation: UCLA, 2000
CEQA and Biological Resources: University of California, Riverside, 2000
CEQA Law Update : UCLA, 2000
Land Use Law/Planning Conference: University of California, Riverside, 2000
CALNAT "95": University of California, Riverside, 1995
Desert Fauna: University of California, Riverside, 1995 & 1999
Habitat Restoration/Ecology: University of California, Riverside, 1995
Geology of Yosemite and Death Valley: University of California, Riverside, 1995
San Andreas Fault: San Bernardino to Palmdale: University of California, Riverside, 1995
Historic Designations and CEQA Law: UCLA. 1994

Freeman, Emma

From: Nolan Leggio <NLeggio@diversifiedpacific.com>
Sent: Thursday, July 07, 2016 9:32 AM
To: VIG/ASP
Subject: RE: Notice of Extension of the Public Review Period for the Valley-Ivyglen Submission Line Project and Alberhill System Project Draft EIR
Attachments: Final SCE Comment Letter.pdf

Follow Up Flag: Follow up
Flag Status: Flagged

Dear Ecology and Environment Team,

Attached is a PDF of a comment letter for the Southern California Edison Valley-Ivyglen Subtransmission Project. A Dropbox URL link to the file is also provided below in case the size of the attachment is to large. A copy of the letter is also being mailed to the address provided below.

https://www.dropbox.com/s/jph7dcdxuwc5fn2/Final%20SCE%20Comment%20Letter.pdf?dl=0

Thank you,

Nolan Leggio
Assistant Project Manager
10621 Civic Center Drive
Rancho Cucamonga, CA 91730
Direct/909-373-2628
Cell/909-230-3073
Fax/909-481-1151
NLeggio@DiversifiedPacific.com

DIVERSIFIEDPACIFIC COMMUNITIES

CONFIDENTIALITY NOTICE: This electronic mail message and any attachments are intended only for the use of the addressee(s) named above and may contain information that is privileged, confidential and exempt from disclosure under applicable law. If you are not an intended recipient, or the employee or agent responsible for delivering this e-mail to the intended recipient, you are hereby notified that any dissemination, distribution or copying of this communication is strictly prohibited. If you received this e-mail message in error, please immediately notify the sender by replying to this message or by telephone. Thank you.

From: vig.asp@ene.com [mailto:vig.asp@ene.com]
Sent: Thursday, May 26, 2016 10:05 AM
To: Nolan Leggio
Subject: Notice of Extension of the Public Review Period for the Valley-Ivyglen Submission Line Project and Alberhill System Project Draft EIR

DIVERSIFIED™ Pacific

July 6, 2016

Alberhill Project and Valley-Ivyglen Project
c/o Ecology and Environment Inc.
505 Sansome Street, Suite 300
San Francisco, CA 94111
Fax: (415) 398-5326
ivyglen@ene.com

Subject: Draft EIR Comment Letter – Southern California Edison Valley-Ivyglen Subtransmission Line Project

Dear Ecology and Environmental Inc. Project Manager,

Thank you for the opportunity to comment on the Draft EIR for the Valley-Ivyglen Subtransmission Line Project.

Diversified Pacific Development Group ("Diversified Pacific") through a subsidiary referred to as Temescal Valley Land, LLC ("Temescal") owns approximately 148 acres (APN 391-080-014 and 015) on the south side of De Palma Road and west of Horsethief Canyon Road. Temescal's property was granted entitlement knows as TTM 30760 which consists of 280 single family homes and a new public park. Diversified Pacific is submitting this letter on behalf of three other property owners in the Horsethief Canyon Area. We are concerned about the intended improvements of the Valley Ivyglen Subtransmission Line, south of the 15 Freeway, between Hostettler Road and Glen Eden Road. The entity name for each property owner is listed below:

- Diversified Pacific ("Temescal")
- Richland Communities
  - Hill Country S.A., L.P ("Renaissance Ranch")
  - Rich Haven, LLC ("Renaissance Ranch")
  - Richland Ventures, Inc. ("Renaissance Ranch")
- Mission Pacific Land Company
  - MPLC JBJ Ranch, LP ("JBJ")
- Pacific Coves Investments
  - Sam-Horsethief, LLC ("Sam")

Diversified Pacific and the other three property owners (cumulatively referred to as "developers") own 1,184 approved residential lots in the Horsethief Canyon Area. All of the properties are generally located west of Hostettler Road, east of Glen Eden Road, and south of the 15 Freeway and De Palma Road. A location map of the existing properties is attached ("Exhibit A"). The approved tentative tract maps or recorded map for each of the four properties has also been attached ("Exhibit B-E"). We have been in negotiations with the Elsinore Valley Municipal Water District to expand the Horsethief Waste Water Treatment Plant and the agreement is expected to be fully executed in July of 2016.

Upon receiving the Notice of Preparation last year, Diversified Pacific filed a comment letter on June 4th 2015 (Attachment "F") regarding the Ivyglen Subtransmission Line Project. After reviewing the DEIR, all four property owners/developers have substantial concerns about the construction of this project. We believe the project and DEIR has not considered the visual impact of the proposed overhead poles projected to be 80' tall and located along De Palma Road and areas south of the 15 freeway. Portions of both Segment VIG6 and Segment VIG7 will be located directly on the streets servicing our future communities. The aesthetic impact to these future homeowners will be significant and is not properly mitigated in the DEIR. Furthermore, the issue of electromagnetic waves from high voltage lines, regardless of the scientific basis of this theory, is perceived as a health hazard. Both the aesthetic impact and perceived health hazard will impact the residential home values for all the properties which are located in immediate proximity to the proposed subtransmission line. All four property owners/developers have a significant investment in the adjacent area of this project and this proposal will cause irreparable financial harm to the value of our property.

Mitigation AES-2 in the DEIR requires Segment VIG2 of the Valley-Ivyglen Subtransmission line to be undergrounded due to the "visual sensitivity" of that portion. The DEIR also recommends an "environmentally superior" alternative of undergrounding the portion of Segment VIG6 on Temescal Canyon Road and Horsethief Canyon Road. This proposed mitigation and alternative clearly recognize that the proposed 75-115 feet poles will be a nuisance and cause substantial aesthetic harm to local residential communities and scenic areas. There are active entitlements on multiple properties which will be directly adjacent to these proposed towers. Therefore, we recommend that a similar mitigation be prepared requiring undergrounding for VIG6 and the portion of VIG7 on De Palma Road.

10621 Civic Center Drive, Rancho Cucamonga, California 91730
Telephone (909) 481-1150 FAX (909) 481-1154

We appreciate the opportunity to comment on the Draft Environmental Impact Report and we anticipate that you will take our concerns into consideration as your prepare the Final EIR.

Respectfully,

Diversified Pacific

Peter J. Pitassi, AIA LEED AP
Sr. Vice President
Community Design and Forward Planning

Richland Communities

Mike Byer
Vice President of Acquisitions

Mission Pacific Land Company

John Abel
Managing Director

Pacific Coves Investments

Erik Lunde
Principal

10621 Civic Center Drive, Rancho Cucamonga, California 91730
Telephone (909) 481-1150 FAX (909) 481-1154

Exhibit A

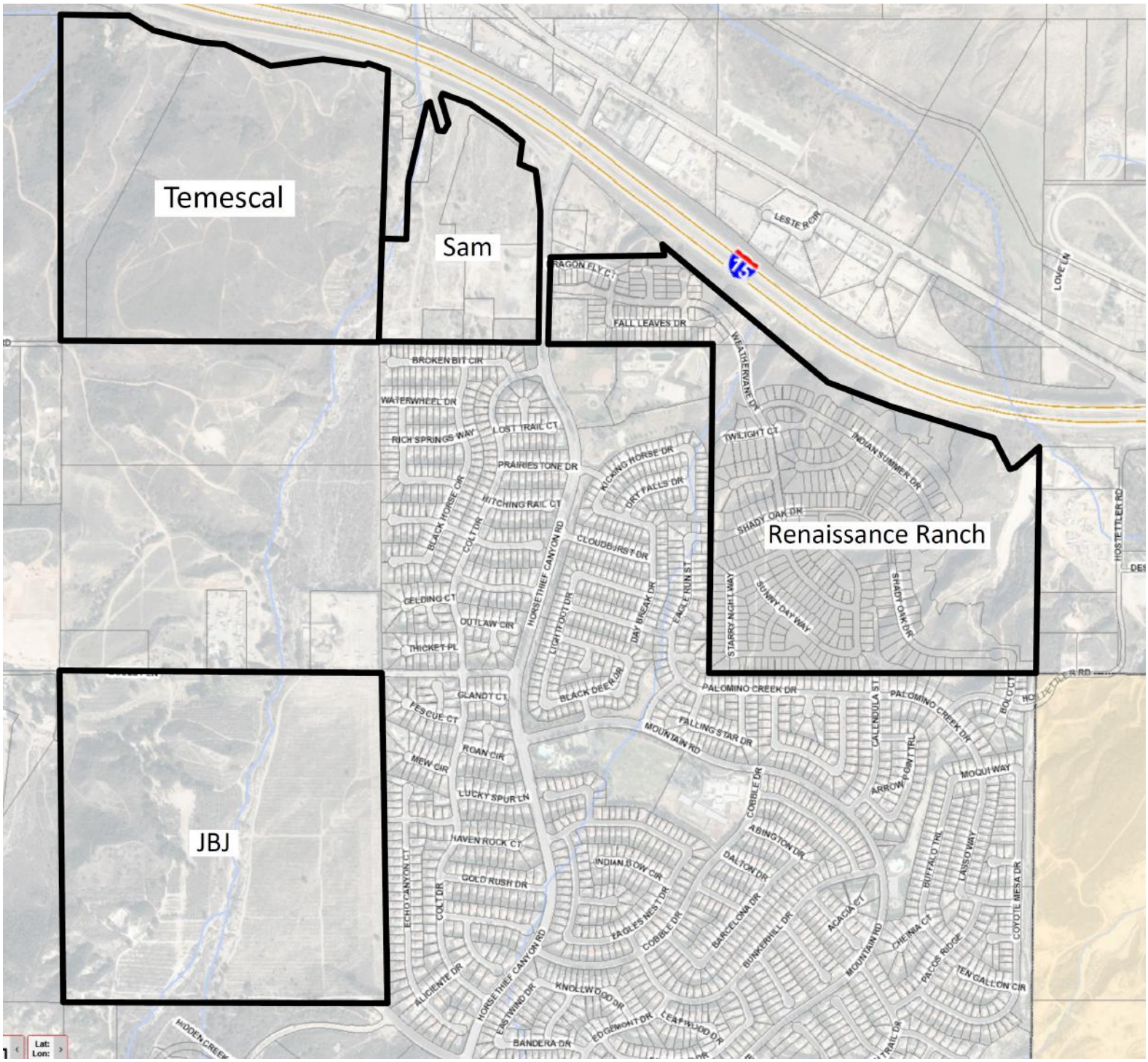
Temescal
Sam
Renaissance Ranch
JBJ
LESTER CIR
LOVE LN
FALL LEAVES DR
WEATHERVANE DR
BROKEN BIT CIR
WATERWHEEL DR
RICH SPRINGS WAY
LOST TRAIL CT
PRAIRIESTONE DR
KICKING HORSE DR
DRY FALLS DR
TWILIGHT CT
INDIAN SUMMER DR
SHADY OAK DR
HITCHING RAIL CT
BLACK HORSE CIR
COLT DR
HORSETHIEF CANYON RD
CLOUDBURST DR
EAGLE RUN ST
STARRY NIGHT WAY
SUNNY DAY WAY
SHADY OAK DR
HOSTETTLER RD
GELDING CT
OUTLAW CIR
LIGHTFOOT DR
DAY BREAK DR
THICKET PL
BLACK DEER DR
PALOMINO CREEK DR
GLANDT CT
FESCUE CT
FALLING STAR DR
MOUNTAIN RD
CALENDULA ST
PALOMINO CREEK DR
BOLO CT
ROAN CIR
MEW CIR
LUCKY SPUR LN
COBBLE DR
ARROW POINT TRL
MOQUI WAY
HAVEN ROCK CT
ABINGTON DR
DALTON DR
INDIAN BOW CIR
GOLD RUSH DR
ECHO CANYON CT
COLT DR
EAGLES NEST DR
COBBLE DR
BARCELONA DR
BUNKERHILL DR
ACACIA CT
MOUNTAIN RD
CHEINIA CT
BUFFALO TRL
LASSO WAY
COYOTE MESA DR
PACOS RIDGE
TEN GALLON CIR
ALICIENTE DR
HORSE THIEF CANYON RD
EASTWIND DR
KNOLLWOOD DR
EDGEMONT DR
LEAFWOOD DR
BANDERA DR
HIDDEN CREEK
Lat:
Lon:

Exhibit B “Temescal”



Exhibit C “Renaissance Ranch ”

TR 31210 & TR 31485

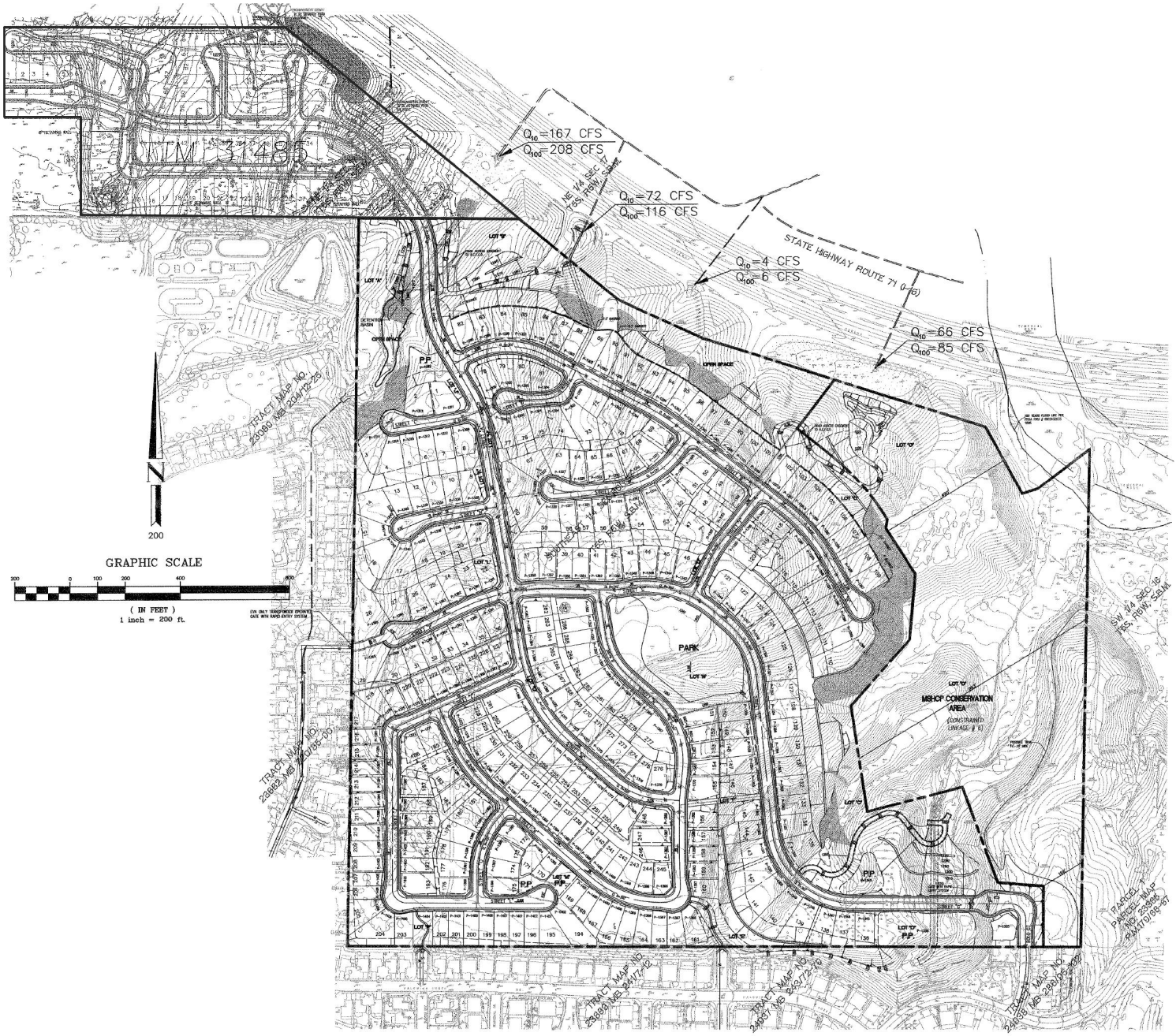

Exhibit D "JBJ"

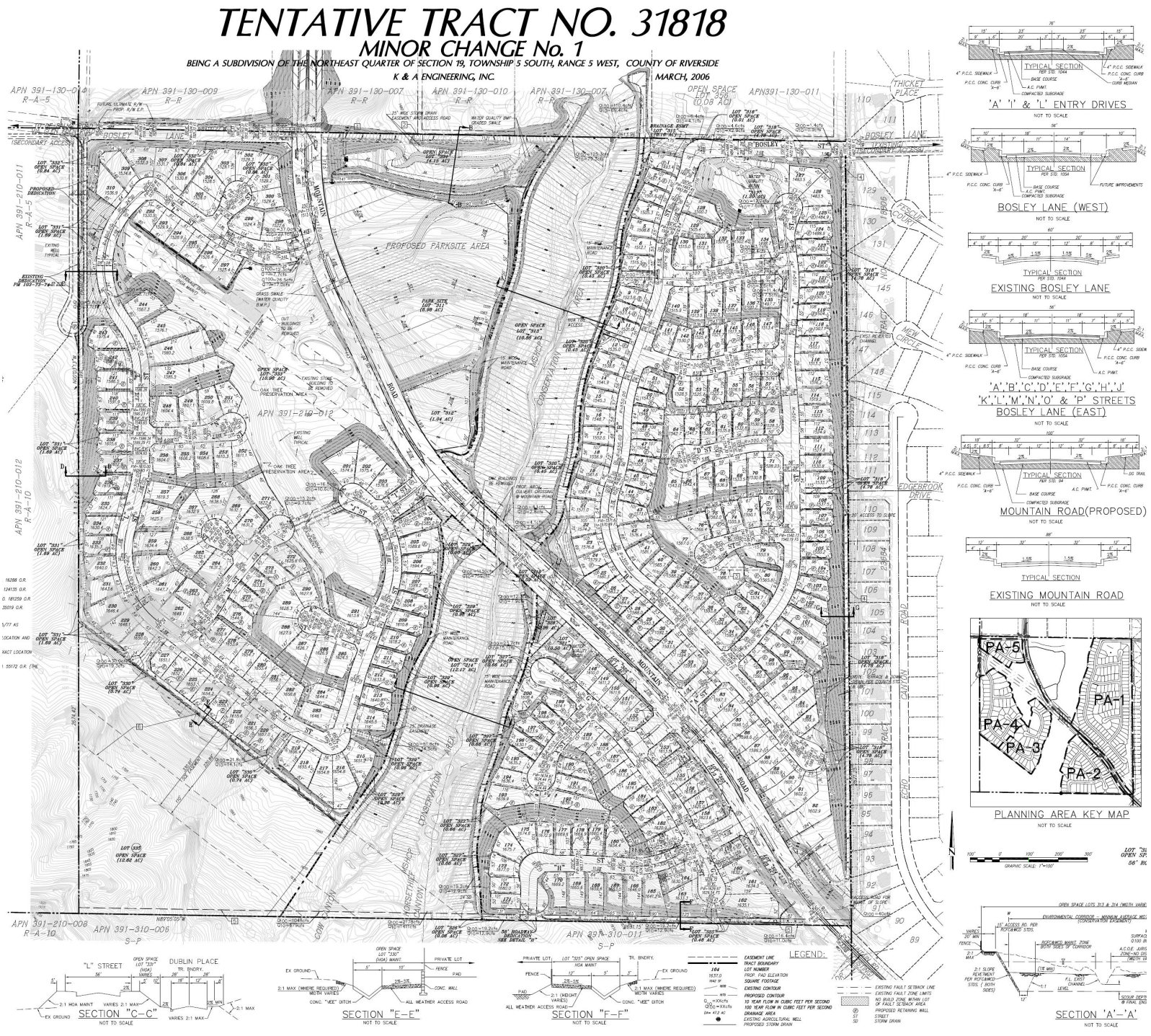

Exhibit E-1 “Sam” (Approved TTM 32984)

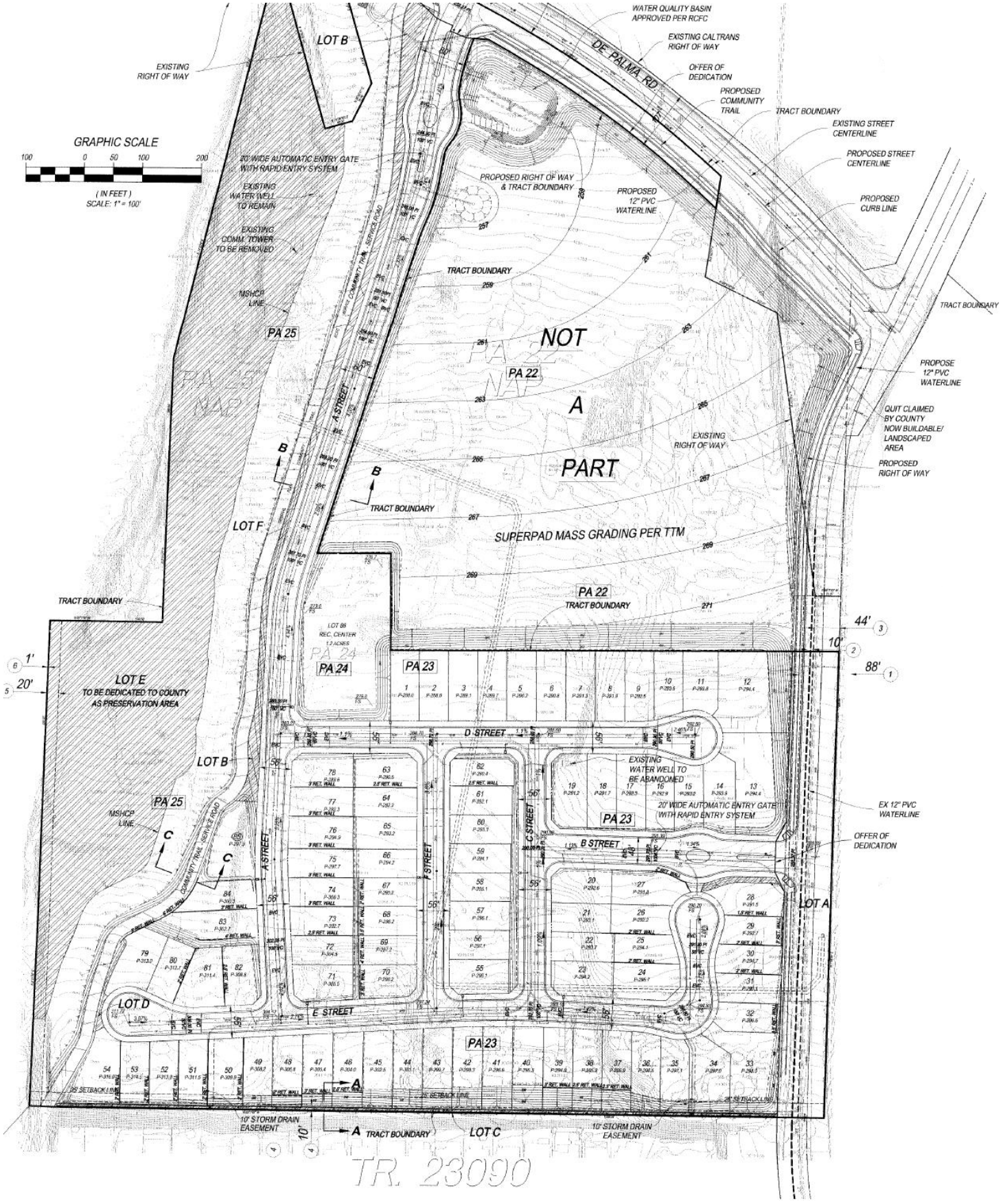

Exhibit E-2 “Sam” (Under Review)

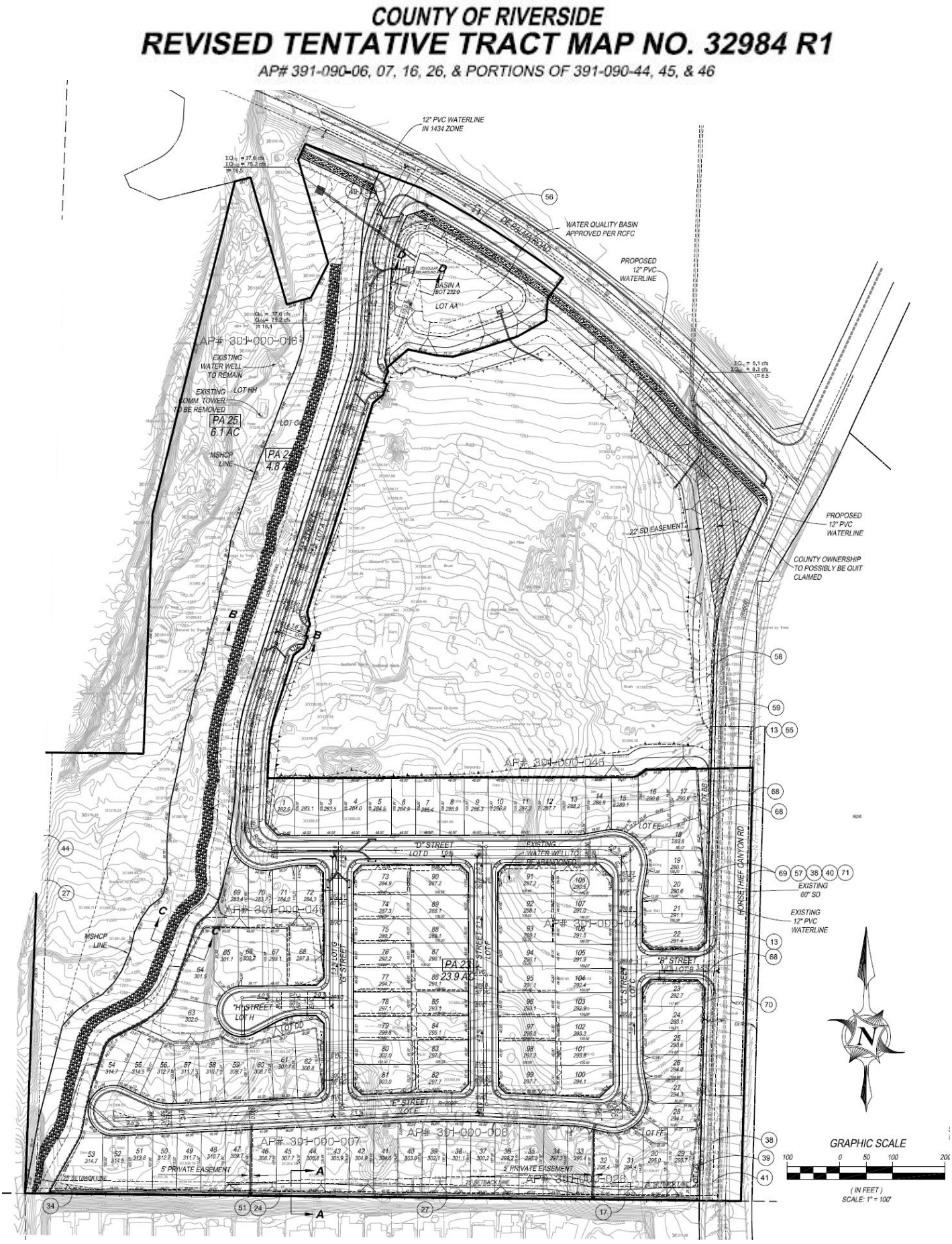

Exhibit E-3 “Sam” (Under Review)



Exhibit F

DIVERSIFIED™ Pacific

June 4, 2015

Alberhill Project and Valley-Ivyglen Project
c/o Ecology and Environment Inc.
505 Sansome Street, Suite 300
San Francisco, CA 94111
Fax: (415) 398-5326
ivyglen@ene.com

Subject: Notice of Preparation – Southern California Edison Valley-Ivyglen Subtransmission Line Project (Application A.07-01-031)

Dear CPUC Project Manager,

Thank you for the opportunity to comment on the Notice of Preparation for the Ivyglen Subtransmission Line Project. We have reviewed the Notice of Preparation and Project Modification Report - Amended Petition for Modification of Decision 10-08-009 before the California Public Utilities Commission.

We own approx. 148 acres (APN 391-080-014 and 015) on the south side of DePalma west of Horsethief Canyon Road. We have an approved TTM No 30760 entitling our project which consists of 261 single family homes and a new public park. In addition we have County approved improvement plans for DePalma which do not reflect power poles either within the street right of way or on our property. No easement exists which would allow Edison to install poles adjacent to the DePalma RoW. The proposed SCE project calls for installing above ground transmission lines, supported by poles of significant height and at a close spacing, along the entire street frontage. It appears from the documents that Segment 7, along the south side of DePalma, will include 11 or 12 poles directly in front of or on our site.

According to the Project Modification Report, imposing the taller and more tightly spaced power poles along De Palma would result in "incremental visual change in the existing landscape character." The visual impact of these poles and the wires they support will create a lasting and significant negative impact on our property.

Furthermore, the issue of electromagnetic waves from high voltage lines, regardless of the scientific basis of this theory, is perceived as a health hazard and, therefore, creates an impact to residential home values. We are a residential developer with a significant investment in our project and this proposal will cause irreparable financial harm to the value of our property.

Therefore, we are formally requesting that the Environmental Impact Report examine the feasibility of the following:

- Undergrounding the portion of the project (Segment 7) from Horsethief Canyon Road along the length of De Palma Road. It should be noted that Segment 8, as proposed, calls for the transmission and fiber optic lines to be installed underground.

We look forward to reviewing the Draft Environmental Impact Report and intend to offer additional comment. Please verify that Diversified Pacific is included in all communication regarding the EIR and associated reports for this project.

Respectfully,
Diversified Pacific
Managing Member, Temescal Valley Land, LLC

Peter J. Pilassi, AIA LEED AP
Sr. Vice President
Community Design and Forward Planning

10621 Civic Center Drive, Rancho Cucamonga, California 91730
Telephone (909) 481-1150 FAX (909) 481-1154

Midbust, Jessica

From: Sakura Davenport <sakura@foremostcompanies.com>
Sent: Tuesday, July 12, 2016 9:51 AM
To: VIG/ASP
Cc: Steve Cameron; Jo Faris (jo@alcasainc.com); Brian Woods; Andy Petitjean
Subject: RE: VIG/ASP
Attachments: SKM_C364e16071209301.pdf

Follow Up Flag: Follow up
Flag Status: Flagged

To Whom It May Concern:

Please see our attached comment letter to the draft EIR.

Sincerely,
Sakura Davenport



Forestar Toscana Development Company
Forestar Toscana, LLC
4590 MacArthur Blvd. Suite 600, Newport Beach, CA 92660
OFFICE 949.748.6714 x207
ForemostCompanies.com

TERRAMOR

July 11th, 2016

California Public Utilities Commission
RE: VIG/ASP
c/o Ecology and Environment, Inc.
505 Sansome Street, Suite #300
San Francisco, CA 94111

RE: Draft Environmental Impact Report, Valley-Ivyglen Project and Alberhill Project

To Whom It May Concern:

Forestar Toscana, LLC and Forestar Toscana Development Company have reviewed the Draft Environmental Impact Report (DEIR) for the proposed Valley-Ivyglen and Alberhill projects. We are the property owner and master developer of the Terramor residential community, located along Temescal Canyon Road in the Temescal Valley area of Riverside County. In addition, we are affiliated with the owner and master developer of the Sycamore Creek residential community, also located in the Temescal Valley area, along Campbell Ranch Road. The locations of the Terramor and Sycamore Creek communities are illustrated on the attached exhibit. Components of the proposed Valley-Ivyglen and Alberhill projects are located within and adjacent to these communities.

As a major property owner in the Temescal Valley for over 15 years, we are intimately familiar with the unique conditions within the Valley, and have several comments and concerns regarding the proposed Valley-Ivyglen and Alberhill projects. Based on our review of the DEIR, we respectfully submit the following comments.

VALLEY-IVYGLEN PROJECT DESCRIPTION IS INCOMPLETE & TOO BROAD TO ALLOW A MEANINGFUL EVALUATION OF IMPACTS AT THE TEMESCAL CANYON ROAD/INDIAN TRUCK TRAIL INTERSECTION

The DEIR indicates that an aboveground, temporary shoofly line would be required during construction at the interface between line segment VIG 7 and VIG 8 (DEIR, p. 2-71). The project's online web viewer identifies the shoofly line on the east side of Temescal Valley Road, beginning approximately 0.3-mile south of the Temescal Canyon Road / Indian Truck Trail intersection and ending approximately 0.2-mile north of the Intersection.

The DEIR must provide more detailed information regarding the temporary line in this location to allow a meaningful evaluation of impacts. On our behalf, the consulting firm T&B Planning, Inc. contacted Mr.

Jensen Uchida, CPUC Project Manager, to obtain more information about the temporary and permanent improvements planned at this intersection, including the planned locations of poles and lines. The firm Ecology & the Environment, Inc., the DEIR consultant, returned T&B Planning's phone call and indicated that no additional information is available at this time. As such, impacts at this location have not been adequately assessed in the DEIR because the DEIR's project description is too broad. The DEIR must identify where the poles, lines, and other temporary and permanent facilities will occur. The DEIR must then identify to what magnitude those facilities will impact existing and planned improvements near the intersection (including but not limited to community monument signs, vehicle travel lanes, etc.).

An entry monument for the Terramor residential community (Riverside County Specific Plan No. 327A1) is planned at the Temescal Canyon Road / Indian Truck Trail intersection. Direct physical impacts to the planned entry monument, retaining walls, and roadway lanes have the potential to occur; however, the DEIR fails to conduct an impact evaluation commensurate with the level of detail required by CEQA.

SPECIFIC PLAN NO. 327A1 MUST BE TREATED AS A SENSITIVE RECEPTOR

The Terramor residential community (Riverside County Specific Plan No. 327A1) is currently under construction; however, the DEIR indicates that this area is undeveloped open space. The DEIR should have treated the geographic area of Specific Plan No. 327A1 as a residential community with appropriate consideration of sensitive receptor locations. The Specific Plan was approved in 2005 and construction of the residential community commenced in late 2015. Treating the area as vacant open space in the DEIR analyses ignored the approved Specific Plan. Residential homes will be located in this area prior to the commencement of the Valley-Ivyglen Project and installation of line segment VIG 8. Line segment VIG 8 is planned to run along Temescal Canyon Road through the southern portion of Specific Plan No. 327A1.

APPLY RESTRICTIONS ON HELICOPTER OVERFLIGHT TO SPECIFIC PLAN NO. 327A1

It is our understanding that construction activities that require helicopter use will only be conducted during daylight hours and that helicopter flight paths would avoid (i.e., not fly over) residential areas (DEIR, p. 2-67). What mechanisms will be used to ensure that the restriction is followed and enforced?

The DEIR should treat the geographic area of Specific Plan No. 327A1 as residential (construction commenced in late 2015, as indicated above). As such, helicopter fly over must be prohibited in this area.

ASP ALTERNATIVE DD DESCRIPTION IS INCOMPLETE AND INADEQUATE

ASP Alternative DD considers the development of a substation on the northeast portion of the yet-to-be-developed Serrano Commerce Center property (Riverside County Specific Plan No. 353, Environmental Impact Report No. 492) in lieu of the proposed Alberhill substation site. The DEIR does not provide an adequate description of ASP Alternative DD; therefore, it is impossible for the DEIR to evaluate the full scope of environmental impacts associated with this Alternative. As such, the Alternative cannot be selected.

The DEIR does not acknowledge how access will be provided to the ASP Alternative DD substation. Under existing conditions, the Serrano Commerce Center property does not contain any permanent, all-weather access roads. A new segment of Temescal Canyon Road – and bridges over the Coldwater

Canyon Wash and Mayhew Wash – is planned to provide ultimate access to the Serrano Commerce Center property. However, there is no timetable to construct the new segment of Temescal Canyon Road or the required bridges. Construction of access roads to the ASP Alternative DD substation (including, potentially a segment of Temescal Canyon Road and associated bridge structures) could result in significant environmental impacts, including potential significant impacts to biological resources and hydrology and water quality. These impacts must be evaluated as part of Alternative DD.

The DEIR claims that no access roads will be required for aboveground 115-kV lines; however, aboveground 115-kV lines are depicted on the Serrano Commerce Center property in locations where no roads currently exist (DEIR, p. 3-11). It is unclear how the aboveground lines on the Serrano Commerce Center property can be maintained without access roads. If access roads are needed to service the aboveground 115-kV lines on the Serrano Commerce Center property, the DEIR's alternatives analysis must identify them and evaluate the impacts associated with these roads.

The DEIR acknowledges that 0.25-mile of new access roads would be required for the 500-kV transmission lines proposed by ASP Alternative DD; but, the DEIR does not disclose the location of the new access roads (DEIR, p. 3-10). The 500-kV lines proposed by ASP Alternative DD are in very close proximity to sensitive biological resources (including the Temescal Wash). The construction of an access road is likely to result in significant environmental impacts that are not disclosed in the DEIR for Alternative DD.

ASP ALTERNATIVE DD IS NOT ENVIRONMENTALLY SUPERIOR

The DEIR identifies ASP Alternative DD as the "Environmentally Superior Alternative" to the proposed Alberhill project. However, the DEIR fails to disclose all impacts associated with ASP Alternative DD (as described above under the "ASP Alternative DD Description" heading) and also fails to account for numerous environmental conditions that are specific to the Serrano Commerce Center property (as described on the following pages). As a result, the DEIR substantially overstates the environmental benefits that would result from selecting ASP Alternative DD as compared to the proposed Alberhill substation location. Upon consideration of the information presented in this letter, the DEIR must be revised to identify ASP Alternative B as the "Environmentally Superior Alternative." ASP Alternative DD is clearly not the superior alternative.

Aesthetics

The DEIR claims that ASP Alternative DD would be "mostly shielded" from I-15 by an existing topographic feature located east of I-15 (DEIR, p. 5-28). This statement is not correct. The topographic feature in question – a ridge located on the western portion of the Serrano Commerce Center property – would only shield views of ASP Alternative DD from the I-15 segment that immediately abuts the Serrano Commerce Center property on the west.

Clear views into the ASP Alternative DD site (including associated overhead lines) would be available from I-15 segments to the north and south of the Serrano Commerce Center property, which the DEIR fails to disclose. Furthermore, as part of ultimate development of the Serrano Commerce Center (refer to approved Riverside County Specific Plan No. 353), the ridge on the western portion of the property would be lowered by 80-120 feet which would reduce the amount of screening provided to passersby along I-15 under long-term conditions (Specific Plan No. 353, p. II-37).

Because ASP Alternative DD would be distinctly visible from segments of I-15 under near-term conditions and would be even more visible under long-term conditions upon the completion of grading in the Serrano Commerce Center, ASP Alternative DD would not avoid the proposed Alberhill substation's significant and unavoidable aesthetics impact and likely would be similar – and not "greatly superior" – to ASP Alternative B's overall aesthetic impact (DEIR, p. 5-34). The DEIR must be revised to conclude that neither ASP Alternative DD nor ASP Alternative B is the "Environmental Superior Alternative" under the issue area of aesthetics.

Air Quality

The DEIR incorrectly claims that the proposed Alberhill project and ASP Alternative DD would require the same general construction activities and would generate the same peak daily construction emissions (DEIR, p. 5-29). Based on the information presented in the DEIR, the proposed Alberhill substation site is relatively flat with an overall topographic relief of approximately 36 feet (DEIR, p. 4.6-1). In addition, the DEIR concludes that the proposed Alberhill substation site contains no significant, site-specific (i.e., unique) hazardous geologic or soils conditions (DEIR, pp. 4.6-21 through 4.6-26). Conversely, the ASP Alternative DD substation site is not flat and contains numerous slopes, with an overall topographic relief of approximately 140 feet (Specific Plan No. 353, p. II-37). In addition, the ASP Alternative DD substation site contains numerous, significant geologic and soils hazards (as described in detail below under the "Geology, Soils, and Mineral Resources" heading of this comment letter), which would require intensive earthwork and grading activities, including remedial grading, to adequately attenuate. Because the ASP Alternative DD substation site contains substantially more topographic relief than the proposed Alberhill substation site, substantially more intensive grading activities would be required to create a usable pad for substation development. Also, because the ASP Alternative DD substation site contains numerous, site-specific geologic and soils hazards that are absent from the proposed Alberhill substation site (which would require special and more intensive grading activities to remediate), it is clear that grading activities on the ASP Alternative DD substation site would be more intense than grading activities on the proposed Alberhill substation site. The DEIR must be revised to analyze the increased construction-related air quality impacts associated with ASP Alternative DD.

In our experience, grading is the most intensive (i.e., highest polluting) phase of project construction due to the simultaneous use of numerous pieces of heavy-duty, diesel-powered equipment, including but not limited to scrapers, graders, excavators, dozers, and loaders. Because grading activities would be more intense on the ASP Alternative DD substation site, it is probable that construction of the ASP Alternative substation would require more grading equipment and would generate greater peak daily air pollutant emissions than would result from construction of the proposed Alberhill substation. Accordingly, the DEIR should be revised to conclude that ASP Alternative DD would result in greater impacts than the proposed Alberhill project to the issue area of Air Quality, and also be revised to conclude that ASP Alternative B is the "Environmentally Superior Alternative" under the issue area of air quality.

Biological Resources

The DEIR substantially downplays the sensitivity of biological habitats on the ASP Alternative DD substation site. While a portion of the potential ASP Alternative DD site contains disturbed ruderal vegetation (as disclosed in the DEIR), the site also contains sensitive natural habitats and habitats that support sensitive biological species: including coastal sage scrub, coastal sage chaparral scrub, juniper woodland, eucalyptus woodland (with non-native grassland understory), and southern arroyo

willow/mulefat scrub (EIR No. 492, p. 4.6-4). In addition, the overhead lines that would be installed on the Serrano Commerce Center property in conjunction with ASP Alternative DD would encroach within eucalyptus woodland (with non-native grassland understory), coastal sage scrub, and alluvial fan sage scrub (EIR No. 492, p. 4.6-4), all of which are considered sensitive biological habitats – and alluvial fan sage scrub, in particular, is considered a unique habitat with a "high priority" habitat for conservation by the California Natural Diversity Database. The habitats present on the ASP Alternative DD substation site support – or have the potential to support – most, if not all, of the same wildlife species that are present on the proposed Alberhill substation site. Additionally, the ASP Alternative DD substation would impact a seasonal ponding depression on the Serrano Commerce Center property that contains non-listed vernal pool fairy shrimp species and has the potential to contain listed fairy shrimp species (EIR No. 492, p. 4.6-25, and EIR No. 492 Appendix D21, n.p.). In contrast, neither the proposed Alberhill substation site nor the ASP Alternative B substation site contain potential habitat for fairy shrimp (DEIR, p. 4.4-36). Accordingly, ASP Alternative DD would not avoid or substantially reduce any of the impacts to sensitive species and vegetation that would result at the proposed Alberhill or ASP Alternative B substation sites and, in fact, impacts would likely be greater at the ASP Alternative DD substation site.

The proposed Alberhill project would require the removal of 12 oak trees (DEIR, p. 4.4-47). The DEIR claims that ASP Alternative DD would "likely" require the removal of less oak trees than the proposed Alberhill project; however, no evidence is provided to support this statement (DEIR, p. 5-30). Numerous oak trees are present along Temescal Canyon Road (on both sides of the street), between I-15 and Indian Truck Trail. Eleven (11) oak trees, alone, are present at the interface between the Serrano Commerce Center property and Temescal Canyon Road (EIR No. 492, p. 4.6-10). ASP Alternative DD would install facilities along Temescal Canyon Road that are not proposed by the proposed Alberhill project, including approximately 2,000 feet of overhead facilities near the Temescal Canyon Road / Indian Truck Trail intersection and an overhead / underground line transition on the southern end of the Serrano Commerce Center property (DEIR, p. 3-10). Due to the high number of oak trees along Temescal Canyon Road, it is likely that impacts to oak trees under ASP Alternative DD would be similar to the proposed Alberhill project (and potentially greater).

The DEIR acknowledges potential impacts to jurisdictional waters that would result from ASP Alternative DD's construction activities within the Temescal Wash; however, the DEIR fails to acknowledge the southwest-trending drainage feature under federal and state jurisdiction that traverses the ASP Alternative DD substation site that would be impacted if the substation was constructed (EIR No. 492, p. 4.6-16). Likewise, the DEIR does not acknowledge the federal and state jurisdictional drainage features and wetlands located on the Serrano Commerce Center property that could be impacted by overhead lines that would be constructed on the property as part of ASP Alternative DD (EIR No. 492, p. 4.6-16). Accordingly, the DEIR must be revised to acknowledge that ASP Alternative DD has the potential to result in substantially greater impacts to jurisdictional wetlands and waters than the proposed Alberhill project.

Lastly, the DEIR does not acknowledge the impacts to the Western Riverside County Multiple Species Habitat Conservation Plan (MSHCP) reserve system that would result from construction of the ASP Alternative DD substation on the Serrano Commerce Center property. The northern and eastern portions of the Serrano Commerce Center property are located within six (6) MSHCP criteria cells. As part of development of the Serrano Commerce Center project, and as approved by the Western Riverside Regional Conservation Authority (RCA) via Joint Project Review 05 08 31 01, approximately 49 acres along the northern and eastern edges of the Serrano Commerce Center property will be conserved as natural open space and dedicated to the MSHCP Conservation Area. The dedicated property will

contribute toward the assembly of Proposed Extension of Existing Core 2. (EIR No. 492, p. 4.6-29; EIR No. 492 Appendix D19) According to DEIR Figure 3-3, the ASP Alternative DD substation site would encroach within the planned dedication area for Proposed Extension of Existing Core 2. In doing so, ASP Alternative DD would decrease the size, functionality, and habitat quality of the MSHCP Conservation Area.

The DEIR concludes that ASP Alternative DD would have "slight" benefits to biological resources as compared to ASP Alternative B (DEIR, p. 5-34). However, the DEIR's conclusion was made without appropriate consideration of the biological sensitivity of the Serrano Commerce Center property (as presented in the preceding paragraphs). When the numerous, significant impacts to important biological resources – including the MSHCP – that would result from construction of the ASP Alternative DD substation on the Serrano Commerce Center property are properly considered, ASP Alternative B clearly emerges as the "Environmentally Superior Alternative" for the biological resources issue area and the DEIR must be revised to reflect this conclusion.

Geology, Soils, and Mineral Resources

The DEIR discloses that the proposed Alberhill project would result in two significant impacts related to geology, soils, and mineral resources: 1) potential adverse effects related to seismic ground shaking; and 2) potential adverse effects related to soil erosion. In both instances, the DEIR concluded that impacts would be less than significant after mitigation. (DEIR, pp. 4.6-21 and 4.6-22) The DEIR also concludes that ASP Alternative DD would reduce slightly the above-stated impacts that would result from the proposed Alberhill project, although both the proposed Alberhill project and ASP Alternative DD would require the same mitigation (DEIR p. 5-31). However, the DEIR incorrectly disclosed that no new geology, soils and/or mineral resources impacts would result from development of ASP Alternative DD.

The DEIR fails to acknowledge the additional, significant geology and soils hazards that are specific to the Serrano Commerce Center property and that would be affected by construction of the ASP Alternative DD substation. Specifically, the soils on the Serrano Commerce Center property are subject to liquefaction and have the potential to be corrosive to concrete and some metals (EIR No. 492, pp. 4.9-9 and 4.9-11). In addition, the geologic formations that underlie the Serrano Commerce Center property exhibit wedge failures associated with heavily jointed bedrock, which could become unstable (EIR No. 492, pp. 4.9-10 through 4.9-12). Mitigation would be required to address these geology and soils hazards and make the site suitable for development (EIR No. 492, pp. 4.9-13 and 4.9-14).

Because ASP Alternative DD would result in three new impacts requiring mitigation related to liquefaction, corrosive soils, and unstable soils while only slightly reducing the proposed Alberhill project's impacts related to seismic ground shaking and soil erosion, the DEIR must be revised to conclude that ASP Alternative DD would result in greater impacts than the proposed Alberhill project to the issue area of geology, soils, and mineral resources.

Hydrology and Water Quality

The DEIR concludes that ASP Alternative DD would reduce the proposed Alberhill project's impacts related to water quality (i.e., sedimentation, waterborne pollution) due a slight reduction in construction activities; but, that both ASP Alternative DD and the proposed Alberhill project would require similar mitigation (DEIR, p. 5-31). The DEIR incorrectly assumed that no new, substantial hydrology and/or water quality impacts would result from ASP Alternative DD (DEIR, p. 5-31).

The DEIR does not acknowledge that the ASP Alternative DD substation site would encroach within the 100-year floodplain of the Temescal Wash (based on the substation footprint depicted on DEIR Figure 3-3). Transmission lines connecting to the ASP Alternative DD substation would be required to cross the Temescal Wash and also would have the potential to impact the 100-year floodplain. Accordingly, due to its location within the 100-year floodplain, ASP Alternative DD would have the potential to redirect flood flows during peak storm events that could result in flooding on the Serrano Commerce Center property or downstream. Impacts to the 100-year floodplain would be significant and would require mitigation. Potential public safety hazards associated with redirection of flood flows during a 100-year storm event would outweigh any potential benefits from slightly reduced water pollution that would be realized by ASP Alternative DD. Accordingly, the DEIR must be revised to conclude that ASP Alternative DD would result in greater impacts than the proposed Alberhill project to the issue area of hydrology and water quality.

Land Use and Planning

As previously discussed under the "Biological Resources" heading earlier in this comment letter, ASP Alternative DD would conflict with the Western Riverside County MSHCP Conservation Area due to impacts within the Temescal Wash, which would decrease the size, functionality, and habitat quality of Proposed Extension of Existing Core 2. The conflict with the MSHCP is an impact that would not occur under the proposed Alberhill project or ASP Alternative B. Therefore, the DEIR must be revised to conclude that ASP Alternative DD would result in greater impacts than the proposed Alberhill project to the issue area of Land Use and Planning. The DEIR also must be revised to conclude that ASP Alternative B is the "Environmentally Superior Alternative" under the issue area of Land Use and Planning.

Environmentally Superior Alternative Conclusion

As summarized on the preceding pages, the DEIR does not account for the full scope of environmental effects that would result from selection of ASP Alternative DD. Upon consideration of the information presented in this letter and in comparison to the proposed Alberhill project, ASP Alternative B would be environmentally superior under the following issue areas:

- Air Quality;
- Biological Resources;
- Cultural Resources;
- Geology, Soils, and Mineral Resources;
- Hazardous Materials;
- Hydrology and Water Quality; and
- Land Use and Planning.

In comparison, ASP Alternative DD would be potentially environmentally superior to the proposed Alberhill project only under the following issue areas:

- Greenhouse Gases;
- Noise and Vibration;
- Public Services and Utilities; and
- Transportation and Traffic.

Following on the rationale presented in the DEIR, substantial weight should be given to ASP Alternative B's benefits under the issue area of air quality because the proposed Alberhill project would result in significant and unavoidable air quality effects. Similarly, substantial weight should be given to ASP Alternative B's benefits under the issue areas of biological resources and land use and planning (due to the absence of a conflict with the MSHCP) because of the importance of biological resource conservation in Riverside County (DEIR, p. 5-34). Also, following the rationale presented in the DEIR, less weight should be given to ASP Alternative DD's reduction in impacts under the issue areas of public services and utilities and transportation and traffic because these are temporary, short-term impacts that can be mitigated to less-than-significant levels by the proposed Alberhill project (DEIR, p. 5-34). It is also important to emphasize that ASP Alternative DD would increase the Alberhill project's significant and unavoidable air quality effects, and would result in new significant impacts requiring mitigation under the issue areas of geology, soils, and mineral resources, hydrology and water quality, and land use and planning.

On balance, ASP Alternative B's superiority in more environmental resource areas, including its superiority in several key resource areas that are given substantial weight in the DEIR, should result in a determination that ASP Alternative B is the "Environmentally Superior Alternative."

CONCLUSION

We appreciate the opportunity to offer comments. Please include both Forestar Toscana, LLC and Forestar Toscana Development Company on the notification list for all future notices associated with this project. Contact information is as follows:

FORESTAR TOSCANA, LLC
4590 MacArthur Blvd, Suite 600
Newport Beach, CA 92660
Attn: Stephen C. Cameron
(949) 748-6714
stevec@foremostcompanies.com

FORESTAR TOSCANA DEVELOPMENT COMPANY
4590 MacArthur Blvd, Suite 600
Newport Beach, CA 92660
Attn: Stephen C. Cameron
(949) 748-6714
stevec@foremostcompanies.com

Sincerely,



Stephen C. Cameron, President
FORESTAR TOSCANA DEVELOPMENT COMPANY
FORESTAR TOSCANA, LLC
4590 MacArthur Blvd, Suite 600
Newport Beach, CA 92660

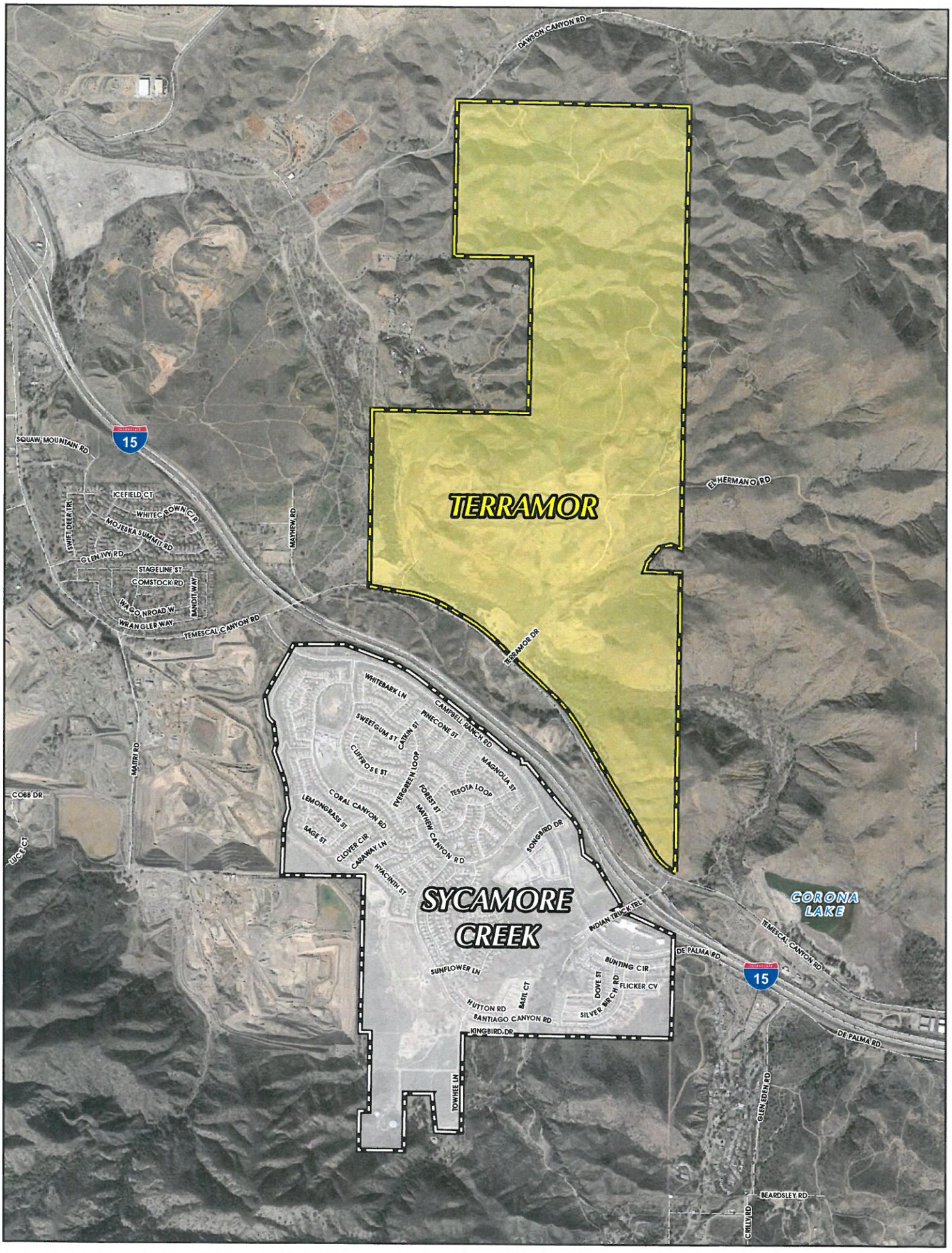
TERRAMOR
SYCAMORE CREEK
CORONA LAKE
DAWSON CANYON RD
SQUAW MOUNTAIN RD
15
ICEFIELD CT
WHITECROWN CT
SWIFT DEER TRL
MOJESKA SUMMIT RD
GLEN IVY RD
STAGELINE ST
COMSTOCK RD
WAGON ROAD W
WRANGLER WAY
MANDI WAY
MAYHEW RD
TEMESCAL CANYON RD
EL HERMANO RD
TERRAMOR DR
WHITEBARK LN
CAMPBELL RANCH RD
PINECONE ST
SWEETGUM ST
CATKIN ST
CLIFFROSE ST
EVERGREEN LOOP
MAGNOLIA ST
TESOTA LOOP
FOREST ST
MAYHEW CANYON RD
CORAL CANYON RD
LEMONGRASS ST
SAGE ST
CLOVER CIR
CARAWAY LN
HYACINTH ST
SONGBIRD DR
MAITRI RD
COBB DR
LUCE CT
INDIAN TRUCK TRL
DE PALMA RD
SUNFLOWER LN
BUNTING CIR
FLICKER CV
DOVE ST
SILVER BIRCH RD
BASIL CT
HUTTON RD
SANTIAGO CANYON RD
KINGBIRD DR
TOWHEE LN
GLEN IDEN RD
BEARDSLEY RD
CRILLY RD

Freeman, Emma

From: Jacki Ayer <airspecial@aol.com>
Sent: Friday, July 15, 2016 4:21 PM
To: VIG/ASP
Subject: FRONTLINES Comments on the Alberhill/Valley-Ivyglen Projects DEIR
Attachments: DEIR Comments FINAL.pdf

Attached please find comments on the Alberhill/Valley-Ivyglen Projects DEIR submitted by Forest Residents Opposing New Transmission Lines (FRONTLINES)

If you are unable to open the attached, pleas contact me at airspecial@aol.com or call me at (949) 278-8460.

Please confirm that you received this email with the attachment to confirm that FRONTLINES met the submittal deadline established by the Commission for comments on the DEIR.

Sincerely,

Jacqueline Ayer
on behalf of FRONTLINES

Freeman, Emma

From: Jacki Ayer <airspecial@aol.com>
Sent: Friday, May 20, 2016 12:18 PM
To: VIG/ASP
Subject: Alberhill information

Follow Up Flag: Follow up
Flag Status: Completed

Hello;

I note that Objective 2 established for the Alberhill project explicitly requires the construction of a new 500 kV substation, which means that any alternative which does not include a 500 kV substation will be rejected as "infeasible" even if it addresses the electrical demand and reliability concerns identified in Objective 1. It appears that the CPUC has conducted an analysis of the issue, and concluded that a new 500 kV substation is the only way to meet SCE's reliability and electrical demand needs on the South Valley system (otherwise it such a substation would not have been included as a project objective). However, I am unable to find this analysis nowhere in the DEIR. I ask that you kindly point out where this analysis is to be found in the DEIR or, in the alternative, please provide me with an electronic copy of this analysis. Please forgive this request, but it is necessary to allow me to fully participate in the CEQA process and provide meaningful and substantive comments on the DEIR prepared for the proposed Alberhill Project.

Thank you

Jacqueline Ayer

PS I left a message on the ENE phone line as well.

FOREST RESIDENTS OPPOSING NEW TRANSMISSION LINES

July 15, 2016

California Public Utilities Commission
RE: VIG/ASP
c/o Ecology and Environment, Inc.
505 Sansome Street, Suite #300
San Francisco, CA 94111
VIG.ASP@ene.com
[Electronic submittal of 52 pages]

Subject: Comments submitted on the Draft Environmental Impact Report Issued for the Valley-Ivyglen and Alberhill Projects.

Reference: The Notice of Preparation issued April14, 2016

Forest Residents Opposing New Transmission Lines ("FRONTLINES) appreciates the opportunity to comment on the Draft Environmental Impact Report ("DEIR") issued by the California Public Utilities Commission ("Commission") for the proposed Alberhill and Valley-Ivyglen Projects, and respectfully submits the following comments pertaining thereto.

FRONTLINES sets forth over the following pages numerous concerns regarding omissions and deficiencies noted in the DEIR, and also presents substantial facts which suggest that both the Alberhill Project and the Ivyglen Project "as proposed" by Southern California Edison ("SCE") are neither necessary nor appropriate. These concerns are presented below along with proposed low impact alternatives which fully eliminate all of the reliability concerns that the Alberhill and Valley-Ivyglen projects are intended to address.

FRONTLINES comments on the Alberhill and Valley-Ivyglen Projects DEIR presented herein are organized in the following sections:

1. Alberhill Project Need
2. Valley-Ivyglen Project Need
3. Deficiencies in the DEIR's project objectives and alternatives analysis.
4. Alternatives that eliminate project impacts and meet all CEQA-compliant project objectives.
5. Deficiencies in the DEIR analysis of SCE's proposed helicopter use.
6. Deficiencies with, and concerns regarding, SCE's "Commitments" which are not binding on SCE, are not recognized by CEQA, and the implementation of which is generally left to SCE's "discretion".
7. Conclusion

As a preliminary comment: FRONTLINES is aware that the Valley-Ivyglen project has already been approved by the Commission [D.10-08-009] and that SCE has sought merely to modify the Valley-Ivyglen Decision to allow for the use of helicopter and blasting methods and to make some minor adjustments to the approved alignment[1]. However, FRONTLINES' analysis of current and future energy demand profiles in the area demonstrates that the reliability problems which SCE sought to address with the Valley-Ivyglen project have never materialized, and are not likely to materialize within a 10 year planning horizon. Additionally, FRONTLINES has developed alternatives to the Valley-Ivyglen project that differ substantially from the proposed Valley-Ivyglen project because they do not require the acquisition and construction of new 115 kV right of way ("ROW") and (correspondingly) reduce virtually all the significant project impacts. Therefore, FRONTLINES has analyzed the Valley-Ivyglen project as if it were a newly proposed project.

FRONTLINES notes that this is not the approach adopted by the DEIR; to the contrary, Section 2 of the DEIR clarifies that the Valley-Ivyglen project is presumed to be fully

---

[1] See SOUTHERN CALIFORNIA EDISON COMPANY (U 338-E) AMENDED PETITION FOR MODIFICATION OF DECISION 10-08-009 filed with the Commission on May 23, 2014.

constructed before the Alberhill project[2] . The fact that the impact analysis of the Alberhill Project presented in the DEIR presupposes that the Valley-Ivyglen project is already constructed raises concerns regarding whether the DEIR has properly considered all of the potential impacts of the Alberhill project, including those impacts that would be generated if the Valley-Ivyglen project is *not* approved as proposed. FRONTLINES is particularly alarmed by this, given that FRONTLINES' recommended alternative to the Valley-Ivyglen project precludes construction of Segments VIG1, VIG2, VIG3, and portions of Segments VIG4 and VIG5. Should the Commission adopt one of FRONTLINES' recommended lower impact alternatives to the Valley-Ivyglen project, it may be necessary to add transmission infrastructure to the Alberhill project, and the impacts of these additions should be set to the Alberhill account. To reconcile these concerns, FRONTLINES's recommended alternatives consider the following:

- The Valley-Ivyglen project as a "stand-alone" project which can proceed independently from the outcome of the Alberhill project
- The Alberhill project as a "stand-alone" project which can proceed independently from the outcome of the Valley-Ivyglen project
- A combined "Alberhill/Valley-Ivyglen" project.

1.0 A NEED FOR THE ALBERHILL PROJECT IS NOT DEMONSTRABLY ESTABLISHED.

The Alberhill Project is intended to accommodate the increased peak demand that SCE claims will in occur in an area served by SCE's existing "Valley South" system which is comprised of thirteen 115 kV substations served by the existing 500/115 kV Valley South Substation (see the line diagram provided in Figure 1[3]). The Alberhill project will add a new 500 kV substation to the "Valley-South" system, and create 2 smaller systems: An "Alberhill System" comprised of five 115 kV substations served by the new Alberhill 500 kV

---

[2] For example, consider the DEIR's description of ASP2, which (according to Table 2-2 and footnote g) simply adds a second 115 kV circuit to existing double circuit towers. However, these towers are not in fact "existing" and they will not exist unless and until Segments VIG4 and VIG 5 of the proposed Valley-Ivyglen project are constructed.

[3] This Figure was supplied by SCE in an Exhibit filed with the FERC in Docket RC15-1 on April 15, 2015. The Figure (identified in Exhibit SCE-7) depicts the current Valley North and Valley South systems (Identified as the "AB Section" and the "D Section", respectively) in: http://elibrary.ferc.gov/idmws/file_list.asp?document_id=14325810.

Figure 1. Existing Valley South System

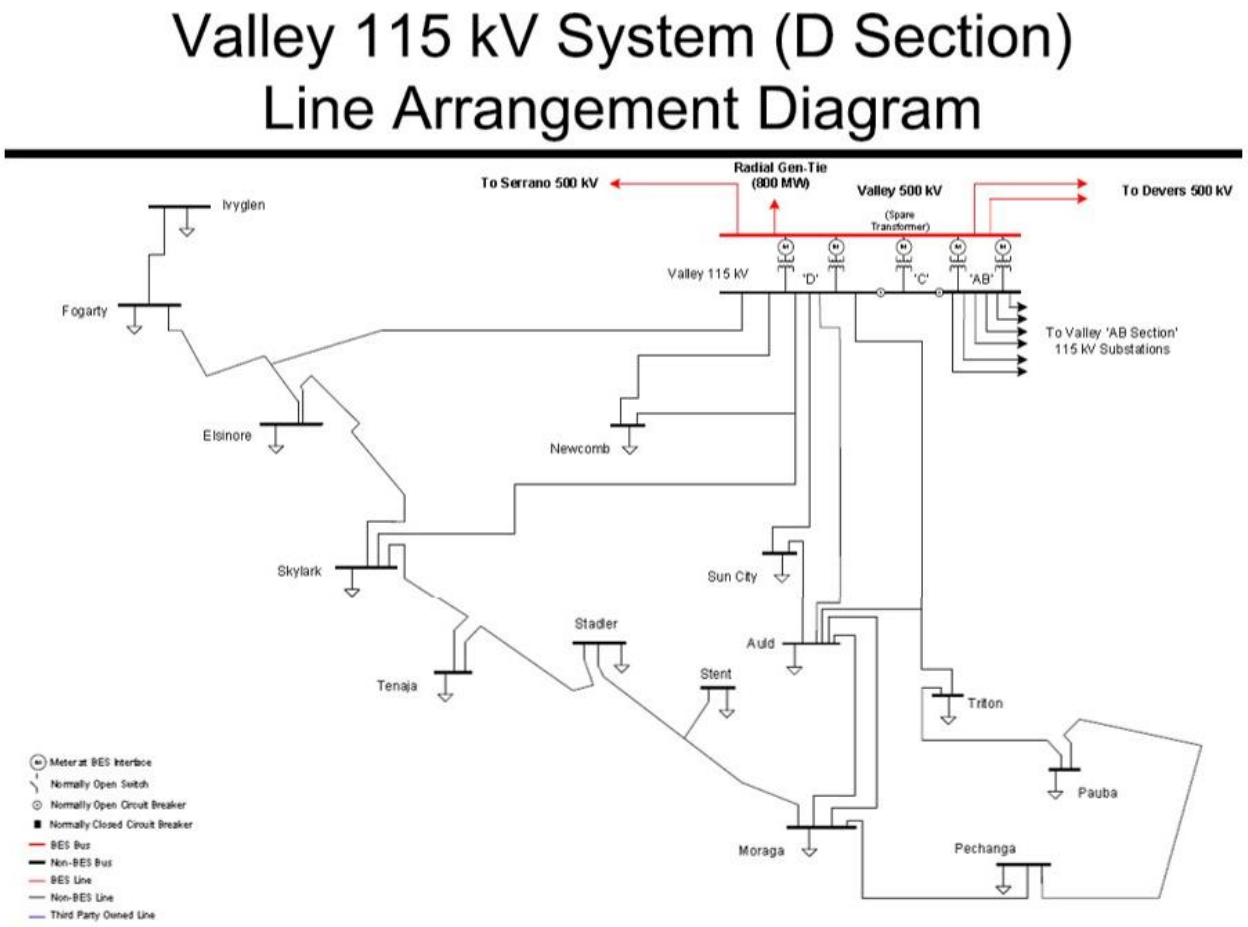

substation, and a smaller "Valley-South System" comprised of nine 115 kV substations served by the Valley South 500 kV Substation. SCE justifies this half billion dollar project based on its claim that electrical demand in the area will increase so substantially over the next few years that it will exceed the operating limit of the two existing 500/115 kV transformers at the Valley South substation [DEIR Page 1-6 at 39]. Given that it is SCE's peak demand projections which establish the entire "purpose and need" for the Alberhill project itself, FRONTLINES' opines that the DEIR should not merely accept SCE's peak demand projections by wrote, but should instead fully examine and thoroughly vet them. Toward this end, FRONTLINES presents the following historic data which conclusively demonstrate the extent to which SCE's past peak forecasts have been inaccurate and unreliable, and also presents planning documents adopted by the County of Riverside and the City of Lake Elsinore which demonstrate the extent to which SCE's future peak forecasts are inaccurate and unreliable. Taken together, the information presented below demonstrate that SCE's peak demand projections do not provide an adequate basis for determining either the "public need" or the "public convenience" of the Alberhill Project.

1.1 The Peak Demand Forecast Which SCE Relies upon to Justify the Alberhill Project is Demonstrably Inaccurate and Unreliable

According to the DEIR, SCE's Alberhill Project is proposed to accommodate the increased peak demand that will occur as a result of significant growth projected for Riverside County and the City of Lake Elsinore [page 1-6 beginning at 28]. As justification, the DEIR cites the peak demand levels projected by SCE for the Valley South system which are predicted to exceed the 1,119 MVA operating limit of the Valley South transformer banks within 3 years [DEIR Table 1-1]. SCE makes this prediction despite the fact that, for the last 8 years, peak demand has consistently remained 20% ***below*** this projected peak demand, and has in fact hovered between 909 MVA and 928 MVA or less.
Additionally, and for the last 8 years, both SCE and the California System Independent Operator ("CAISO") have declared that there is a substantial and pressing need for the Alberhill Project: SCE's PEA filed in 2009 claims that the Valley transformers would overload by 2013 [see Table 1.1 on page 1-6]; and CAISO's 2009 approval of the Alberhill

project asserted that the Valley transformers would overload by 2014[4]. FRONTLINES observes that ***none*** of these predictions have come to pass, which calls into substantial question the credibility of SCE's peak demand forecast projections and (by extension) SCE's entire basis for claiming that the half billion dollar Alberhill project is needed.

1.2 SCE's Peak Demand Forecasts Are Inconsistent With Adopted Planning Documents

The DEIR presumes that, by 2035, the population of Riverside County will double and the population of Lake Elsinore will nearly double from 2010 population levels [1-6 at 33]. Therefore, the DEIR relies on SCE's prediction that, by 2024, peak demand on the Valley South system will increase to 1,269 MVA, which is nearly 40% higher than the 2014 peak demand [Table 1-1]. However, SCE's energy demand projection fails to consider the widespread implementation of EE (energy efficiency), DR (demand response), ES (energy storage), and DG (distributed generation) programs that will occur within the Valley South system and will significantly mitigate demand through the 10 year planning horizon and beyond.

In addition, SCE's energy demand projection for the South Valley system is utterly contrary to adopted Riverside County planning documents which project a *decrease* in Riverside County energy use by 2020 through implementation of the following local planning and development programs[5]:

R2-E1: New residential buildings are 5% - 20% more efficient than the current Title 24 standards (implemented pursuant to General Plan Policies AQ 5.2, AQ 5.4, LU 4.1e, OS 16.1 and OS 16.9)

R2-E2: Incorporate renewable energy (such as photovoltaic panels) into new residential developments that should be sufficient to reduce the new home's projected use of grid energy by 50% (implemented pursuant to General Plan Policies OS 10.1, OS 11.2, and OS 11.3,).

---

4 See http://www.caiso.com/Documents/091216DecisiononAlberhillSubstationProject-Memo.pdf

5 Section 4.3.B (page 4-10) & Section 5.2 (on page 5-3) - Riverside County "Climate Action Plan" (December 2015). http://planning.rctlma.org/ZoningInformation/GeneralPlan/RiversideCountyClimateActionPlan%E2%80%93December2015.aspx

R2-E3: Incorporate energy reduction measures for residential buildings undergoing major renovations to reduce energy consumption in retrofitted homes by a minimum of 15%.(implemented pursuant to General Plan Policies OS 16.5, OS 16.7, and OS 16.9,).

R2-E4: Retrofit existing homes with photovoltaic panels such that 50% of all of the home's electrical usage is offset (Implements General Plan Policies OS 10.1, OS 11.2, and OS 11.3).

R2-E5: New commercial buildings are 5% - 20% more efficient than the current Title 24 standards (implemented pursuant to General Plan Policies AQ 5.2, AQ 5.4, LU 4.1e, OS 16.1 and OS 16.9).

R2-E6: Incorporate renewable energy (solar or other) into the design and construction of new commercial, office, and industrial developments that should offset at least 20% of the projected energy use (implemented pursuant to General Plan Policies OS 10.1, OS 11.2, and OS 11.3,).

R2-E7: incorporate energy reduction measures for commercial or industrial buildings undergoing major renovations to reduce energy consumption by a minimum of 20% (implemented pursuant to General Plan Policies AQ 5.2, AQ 5.4, OS 16.1, OS 16.7 and OS 16.9,).

R2-R8: Retrofit existing streetlights with Induction lamps which consume 50% less energy.

[Note: These energy reduction programs are separate from, and not included in, state-mandated renewable energy programs such as the 2020 33% RPS or the 2030 50% RPS]

The City of Lake Elsinore has adopted similar energy reduction programs that will further reduce local energy demand[6]. Through implementation of these programs, energy demand in the Valley South system is not expected to increase by 2020 (and in fact is expected to drop). This controverts SCE's prediction that peak demand on the South Valley system will increase to 1,169 by 2020 and exceed transformer operating limits at the Valley substation. From the information set forth above, it seems likely that SCE's entire justification for the proposed Alberhill project is based on speculative predictions of peak energy demand which (history shows) are substantially inaccurate and contrary to adopted city and

---

6 See http://www.lake-elsinore.org/home/showdocument?id=7249

county energy reduction programs and planning documents. These facts cast serious doubt on SCE's argument that the proposed Alberhill Project is "needed" to accommodate increases in peak demand.

1.3 Additional Facts Demonstrating that the Alberhill Project is not Needed.

Besides the demonstrable inaccuracies in SCE's peak demand projections, there are many other reasons why SCE's proposed Alberhill Project is unnecessary and even inappropriate. Taken together, these reasons (set forth below) demonstrate the imprudence of SCE's request for Commission approval of the half billion dollar Alberhill project:

The Alberhill 500 kV project creates a massive CAISO grid connection that will cost ratepayers half a billion dollars and only serve 5 small distribution substations: SCE's proposed Alberhill substation will be constructed with a 1,680 MVA capacity that accommodates three 560 MVA transformer bays plus a spare 560 MVA bay. Yet, SCE intends to use Alberhill to serve only 5 small substations that have a combined peak demand that appears to be well below 500 MVA. Implementing Alberhill to solve a virtually non-existent transformer overload concern on the Valley South system is like using a sledgehammer to break up a small lump of sugar.

The combined capacity of the Alberhill and Valley substations is more than double the amount needed to reliably serve demand. SCE's Alberhill project will place three enormous 500 kV substations (Valley North, Valley South, and Alberhill) having a combined transmission capacity of 3,920 MVA within 14 miles of each other to serve an Electrical Needs Area with a combined peak load of less than 1850 MW [7]. This constitutes a *massive* over-concentration of transmission capacity in an area that has predominantly medium and low density suburban and rural development and which has no need for such capacity either now or in the future.

SCE's PEA misrepresents the current 115 kV Valley South system, and based on this misrepresentation, SCE wrongly claims that a new 115 kV line from Newcomb to Skylark is needed: SCE's PEA filed September 30, 2009 states [page 2-7] "As shown on Figure 2.3, Alberhill System configuration, there is no existing connection between Newcomb Substation and Skylark Substation. Both Newcomb Substation and Skylark Substation are presently connected to Valley Substation from two separate subtransmission lines, each originating at Valley Substation. Because both Newcomb Substation and Skylark Substation would be served from the new Alberhill System, a connection is necessary between Newcomb and Skylark Substations to maintain the minimum number of source lines for each substation." SCE supplied the following figure (labeled Figure 2.3) to illustrate the system it describes (Figure 2.3 was modified slightly and relabeled 2.3a in SCE's modified PEA filed April 14, 2011):

---

[7] See page 5 of "FERC Order on Local Distribution Determination" issued December 31, 2015 which states that SCE's Valley 115 kV system (which is comprised of Valley North PLUS Valley South) supports a load that is roughly 1825 MW. Found here: http://www.nerc.com/FilingsOrders/us/FERCOrdersRules/Order_SCE_20151231_RC15-1.pdf

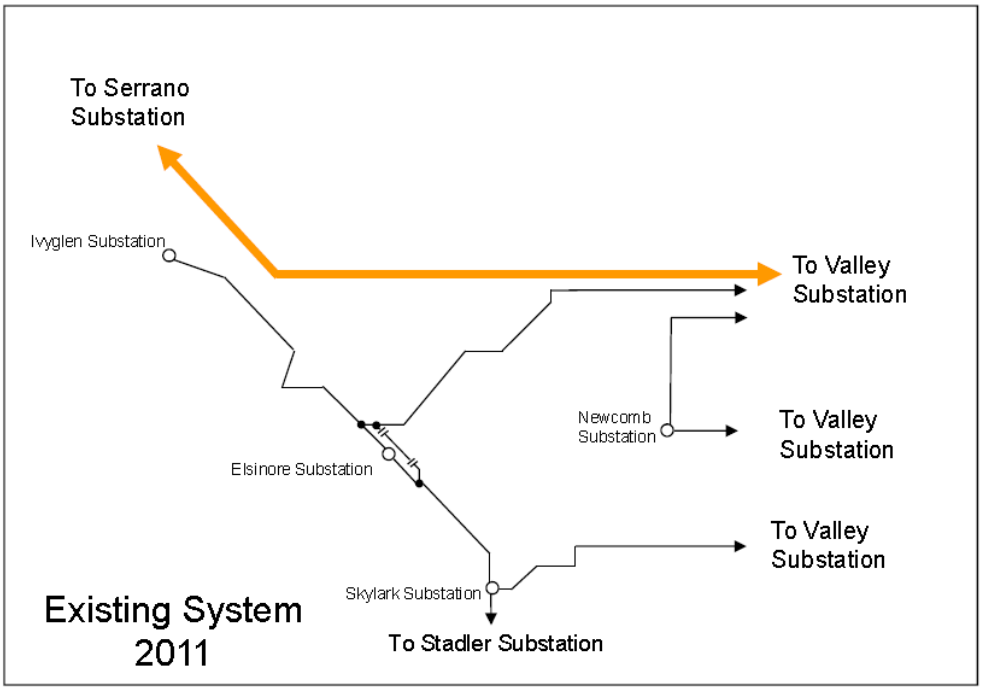

Based on this Figure 2.3, SCE claims that there is no 115 kV connection between Skylark and Newcomb, which is why extensive new 115 kV lines (designated as Segments ASP5, ASP6, and ASP7) are included as part of the Alberhill 500 kV substation project. However, ***SCE's statements and figure are false***. As clearly shown in Figure 1 provided above, there is an existing line connecting Skylark to Newcomb, so SCE's claim that a new line is needed to make such a connection is false. The real reason that SCE proposes a second 115 kV line between Newcomb and Skylark is because the proposed Alberhill system (comprised of Alberhill and the Newcomb, Skylark, Ivyglen, Elsinore and Fogarty substation) eliminates a crucial 115 kV line that is necessary to serve the Tenaja, Stadler, and Stent substations via Skylark (as shown in figure 1). In other words, if Alberhill is constructed as proposed, the Tenaja and Stadler and Stent substations will be served via a single 115 kV connection at Moraga. This "radial service" configuration created by the proposed Alberhill system is highly unreliable, and it can only mitigated by constructing Segments ASP5, ASP6, and ASP7 which extends a second 115 kV transmission line south from Newcomb toward Skylark to tie into the existing 115 kV line serving Tenaja. In other words, it is solely the Alberhill Project itself which drives the need for Segments ASP5, ASP6, and ASP7; if Alberhill is not constructed, there is no need to construct ASP5, ASP6, or ASP7.

The inclusion of an additional 115 kV line between the Skylark and Alberhill substations as part of the Alberhill Project is unjustified and unnecessary. As part of the proposed Alberhill Project, SCE intends to construct a new 10+ mile 115 kV line extending from the Skylark substation north to Alberhill (ASP2, ASP3, and ASP4). 6+ miles of this new line will be created by placing a second 115 kV circuit on the Valley-Ivyglen Segments VIG4, VIG5 and VIG6. The remaining 4+ miles will be created by removing existing single circuit poles and replacing them with double circuit facilities. SCE does not even bother to explain why this new 115 kV line is needed; SCE offers no peak demand data or power flow studies or any

other information to justify the added cost and impacts that will be incurred to construct this line. To the contrary, SCE merely includes it as a perfunctory element of the Alberhill project itself. The reason SCE does not justify any reliability need within the existing Valley South system for this additional 10+ mile 115 kV line is because there is none. In fact, this new 10+ mile long 115 kV line is solely an artifact of the proposed Alberhill system, because it provides the Alberhill system with the third 115 kV line needed to meet standard transmission system planning guidelines. This new 10+ mile 115 kV line is not necessary to serve any current or future demand within the existing Electrical Needs area and it is certainly not needed for any purpose other than as a collateral artifact of SCE's proposed "Alberhill system". In other words, the need for Segments ASP2, ASP3, and ASP4 is driven solely by the proposed Alberhill substation itself; if Alberhill is not constructed, there is no need for either ASP2, ASP3, or ASP4.

SCE's Proposed "Alberhill System" is Wasteful and Creates Unnecessary Impacts. As shown in DEIR Figure 2-3, SCE's proposed Alberhill 115 kV project relegates an existing, fully functioning, and perfectly viable 115 kV line and ROW to "standby" use by "keeping it energized but not load serving under normal operations". Though SCE's ratepayers have paid for the construction and maintenance of this currently operational, 10+ mile long, single circuit 115 kV line that extends from the Valley South Substation to the heart of Lake Elsinore, SCE intends to sidestep it completely in favor of an entirely new 10+ mile long single circuit 115 kV transmission line in an entirely new ROW that extends from Valley South to the heart of Lake Elsinore. Not only does this create unnecessary and significant impacts resulting from the development of an entirely new ROW corridor, it is also an unnecessary and unacceptable waste of ratepayer resources.

CAISO's Analysis of the Alberhill Project confirms that other, less costly alternatives are available to address SCE's concerns. When CAISO approved the Alberhill Project in December, 2009, it considered various alternatives that would address SCE's concerns regarding potential overloads on the Valley South transformers. One of the alternatives that CAISO considered was to simply add a third 500/115 kV transformer to the Valley South 500 kV bus. CAISO acknowledged that this "third transformer alternative" would address SCE's overload concerns at a fraction of the cost of the proposed Alberhill project. The only drawbacks that CAISO found with this "third transformer alternative" was that it 1) Would "Exceed SCE's substation design practice of limiting to 3 load-carrying banks and 1 spare within 500 kV substation"; 2) Does not "create any new 115 kV system ties for substation load transfers"; and 3) "Increases further loss of load exposure". The first criticism is utter nonsense, because the new transformer added by this alternative would *be* the third "load-carrying" transformer bank at the Valley South substation. Therefore, SCE's "Substation Design Practice" would not be violated. The second criticism is equally nonsensical, because it is SCE's standard practice to design subtransmission systems with a single CAISO grid connection and minimal system ties. This design practice prevents SCE's subtransmission systems from operating in parallel to the CAISO grid and causing "loop flow" problems and other impacts to the CAISO-controlled Bulk Electric System ("BES"). In other words, the second drawback identified by CAISO is essentially a criticism of SCE's entire transmission design philosophy, and is therefore completely invalid. Finally, CAISO's third criticism is wholly unsubstantiated; CAISO fails to identify what the "load exposure"

is, or how the "load exposure" is lost, or how this "lost load exposure" is "increased" by the third transformer alternative. Clearly, CAISO's analysis of the "third transformer alternative" demonstrates that it will fully address ALL of SCE's concerns with virtually no downside and (more importantly) ***NO ENVIRONMENTAL IMPACTS***. FRONTLINES contends that the DEIR errs substantially in failing to properly consider this alternative.

2.0 A NEED FOR THE VALLEY-IVYGLEN PROJECT IS NOT DEMONSTRABLY ESTABLISHED.

FRONTLINES understands that the Valley-Ivyglen Project is a "stand-alone" project that is independent of the Alberhill project and has in fact already been approved by the Commission [Decision D.10-08-009]. FRONTLINES also understands that the Valley-Ivyglen portion of the DEIR is intended to address SCE's Petition for Modification ("Petition") of D.10-08-009 to permit segment realignment and the use of helicopters, blasting, and other changes. Nonetheless, FRONTLINES observes that the circumstances under which D.10-08-009 was approved in 2010 have changed, and that the projected peak demands that were used to justify D.10-08-009 have never materialized. These facts warrant reconsideration of whether the Valley-Ivyglen project itself should be constructed. SCE's Valley-Ivyglen project is intended to accommodate increased electrical demand on the Valley-Elsinore section of the existing Valley South system [DEIR page 1-7 beginning at 18]. The Valley-Ivyglen project will add a new 115 kV transmission line in an entirely new Right of Way (ROW") corridor that extends from the Valley South substation to the Ivyglen substation [see DEIR Figure 2-1]. SCE justifies the Valley-Ivyglen project based on projected peak demand levels on the Valley–Elsinore line, and claims that peak demand may exceed the 184 MVA operating limit by this year [see DEIR Page 1-7 at 19].

2.1 The Peak Demand Forecast Which SCE Relies upon to Justify the Valley-Ivyglen Project is Demonstrably Inaccurate, Unreliable, and Inconsistent With Adopted Planning Documents.

Given that it is SCE's peak demand projections which establish the entire "purpose and need" for the Valley-Ivyglen project, FRONTLINES' opines that the DEIR should not merely accept SCE's peak demand projections by wrote, but should instead fully examine and thoroughly vet them. Toward this end, FRONTLINES observes that peak demand on the Valley-Elsinore line has consistently remained 10% *below* the 184 MVA normal operating

level (also known as "normal line rating" or "normal line capacity"), and has in fact hovered between 163 MVA and 168 MVA or less [DEIR Table 1-2]. Despite these facts, SCE projects that the peak demand on the Valley–Elsinore line will increase by 15% in just 2 years[8] and jump by 28% in the next 8 years! SCE also contends that, under a Peak N-1 event scenario[9], the emergency operating limit on the existing Elsinore-Fogarty tap line to Valley line would be exceeded by 17%[10] assuming current demand levels; this increases to 27%[11] under 2024 projected levels. However, nothing about SCE's peak demand projections on the Valley-Elsinore line forecast has *ever* been accurate or reliable even as far back as 2007, when SCE first claimed the Valley-Ivyglen project was needed because demand would exceed the 184 MVA capacity of the Valley-Ivyglen line *by 2008*[12]. Clearly this was wrong, since the actual 2008 peak demand was only 146 MVA, which is 22% below the normal rating.

FRONTLINES further observes that planning documents adopted by the County of Riverside and the City of Lake Elsinore (described above) indicate that peak demand on the Valley-Elsinore line will actually *drop* over time and not increase. Taken together, this information demonstrate that SCE's peak demand projections do not provide an adequate basis for determining either the "public need" or the "public convenience" of the Valley-Ivyglen project.

---

8 The 2016 peak demand projected by SCE is 187 MVA, which is 15% higher than the actual 163 MVA peak demand recorded for 2014.

9 It appears that such an overload would only occur if all powerflows out of Skylark were interrupted, because that would require the Valley Elsinore line to serve all the load at the Ivyglen, Fogarty, Elsinore, and Skylark substations. To confirm this, FRONTLINES requested line capacity and load data from SCE, but SCE refused to provide this information. In any event, it does not seem that an N-1 would be sufficient to cause the overloads that SCE cites

10 The 2016 projected peak N-1 loading is 292 MVA, which is 17% higher than the 248 MVA emergency operating limit on the Valley-Elsinore-Fogarty line.

11 The 2024 projected peak N-1 loading is 315 MVA, which is 27% higher than the 248 MVA emergency operating limit on the Valley-Elsinore-Fogarty line.

12 See Page A-13 of the Draft EIR prepared in 2009 for the Valley-Ivyglen project originally proposed by SCE found here: http://www.cpuc.ca.gov/Environment/info/ene/ivyglen/DEIR/A%20-%20Introduction.pdf

2.2 Additional Concerns with the Valley-Ivyglen Project.

Besides the demonstrable inaccuracies in SCE's peak demand projections, there are other reasons (set forth below) why the Valley-Ivyglen Project is unnecessary and even inappropriate. Taken together, these reasons demonstrate the imprudence of a continuation of the Valley-Ivyglen project approval.

The Valley-Ivyglen Project is Wasteful and Creates Unnecessary Impacts. The Valley-Ivyglen project involves the construction of an entirely new 115 kV ROW extending from the Valley South substation along Highway 74 and into the City of Lake Elsinore, even though there is already an existing 115 kV line ROW that extends from the Valley South substation to the City of Lake Elsinore. Rather than utilize this existing 115 kV ROW (which is consistent with the Garamendi Principals[13] of transmission siting) the Valley-Ivyglen project creates a whole new ROW corridor which introduces additional and unnecessary impacts and wastes ratepayer resources.

The Valley-Ivyglen project introduces an intrinsic imbalance to the Valley South system. It appears to FRONTLINES that the Valley-Ivyglen project provides four 115 kV lines from the Valley South substation to serve the northernmost 5 substations (Ivyglen, Fogarty, Skylark, Elsinore and Newcomb), yet it relegates the remaining 9 substations on the Valley-South system (Pauba, Pechanga, Triton, Moraga, Stent, Sun City, Auld, Stadler, and Tenaja) to be served by only three 115 kV lines (See Figure below) SCE offers no explanation for this imbalance, and does not clarify why the northernmost 5 substations should be more reliably served than the southernmost 9 substations.

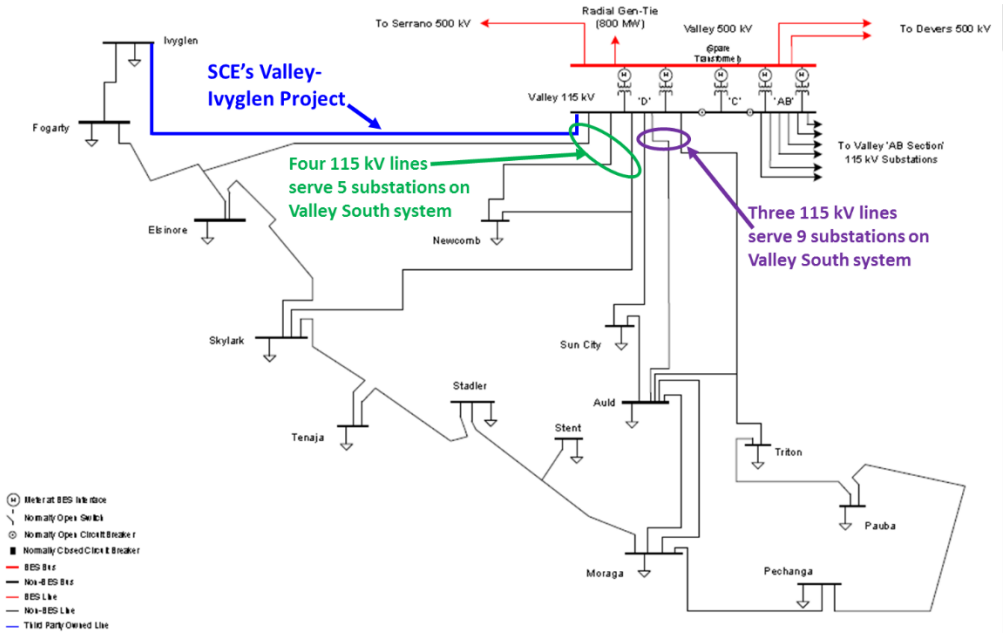

13 The "Garamendi Principal" is embodied in legislation encouraging upgrades to existing righs of way; see: http://www.energy.ca.gov/2010publications/CEC-600-2010-007/CEC-600-2010-007-D.PDF

FRONTLINES does recognize that the Fogarty and Ivyglen substations are only served by a single 115 kV line which extends from a tap line from the Valley substation (as depicted in Figure 1), and that this "radial" configuration is unreliable because the Fogarty and Ivyglen loads will be dropped if a contingency event removes this single 115 kV line from service. Therefore it is prudent to develop a second 115 kV line to serve these substations. FRONTLINES also recognizes that an event which interrupts all powerflows out of Skylark could cause the Valley-Elsinore line to exceed its emergency rating. However (and as discussed in detail in Section 4 below), both of these concerns can be addressed in a number of ways which do not require the construction of an entirely new transmission corridor and miles of new transmission line and which do not create the impacts of SCE's proposed Valley-Ivyglen Project

3.0 THE DEIR'S ALBERHILL PROJECT OBJECTIVES AND ALTERNATIVES ANALYSIS ARE INADEQUATE AND DO NOT COMPLY WITH CEQA.

FRONTLINES contends that the DEIR Project Objectives do not comply with CEQA because they are so narrowly defined that they improperly constrain the range of reasonable alternatives that are considered to feasibly achieve the project purpose. FRONTLINES further contends that the DEIR is deficient because it fails to properly address the 24 miles of 115 kV infrastructure that is included as part of the proposed Alberhill Project, and it fails to properly analyze impacts of project alternatives that do not rely on the construction of a new 500 kV substation.

3.1 The DEIR's Project Objectives are Too Narrowly Constrained and Improperly Limit the Range of Alternatives Considered Which Violates of CEQA.

CEQA requires that the statement of objectives established by an EIR be sufficiently broad to allow the consideration of a reasonable range of project alternatives. For decades, the Courts have continually reinforced this requirement and have rejected EIRs which establish project objectives that are so narrowly defined that they improperly constrain the range of alternatives considered. FRONTLINES maintains that the Alberhill Project Objectives established by the DEIR suffer from this deficiency.

All of the justification provided by the DEIR for the Alberhill Project and all the data that is supplied to support this justification is rooted in the overload potential of the two existing 500/115 kV transformers on the Valley South system (for example, Table 1-1 which specifies the 1,119 MVA operating limit of the transformers, as well as page 1-6 at 41, page 1-7 at 3, page 1-3 at 19, etc.). Therefore, a set of project objectives that reflects this concerns would be appropriate and compliant with CEQA because it would invite the consideration of a reasonable range of alternatives (including non-substation alternatives). However, this is not what the Alberhill Project Objectives achieve. Section 1.2 of the DEIR establishes the following Alberhill Project Objectives [page 1-10 at 1]:

1. Relieve projected electrical demand that may exceed the operating limit of the two load-serving Valley South 115-kV System 500/115-kV transformers;

2. Construct a new 500/115-kV substation within the Electrical Needs Area ("ENA") that provides safe and reliable electrical service pursuant to NERC and WECC standards; and

3. Maintain system ties between a new 115-kV System and the Valley South 115-kV System that enable either of these systems to provide electricity in place of the other during maintenance, during emergency events, or to relieve other operational issues on one of the systems.

The first objective appears sufficiently broad to encompass all the reliability concerns set forth in the DEIR regarding the Alberhill project because it properly identifies the operating limit concerns regarding the two load-serving Valley South 115-kV System 500/115-kV transformers. Therefore, it establishes an appropriate basis for evaluating a reasonable range of alternatives (including non-substation alternatives) to address these reliability concerns in a manner that is wholly consistent with CEQA. However, the second and third objectives amputate the broad and encompassing scope engendered in the first objective to such an extent that they constrain all project alternatives to only those which provide SCE with a new substation and (by extension) a new 115 kV "system". DEIR Objectives 2and 3 mandate only project alternatives that provide a new substation *even though the DEIR does not provide a* ***shred*** *of evidence* demonstrating that a new 500 kV substation is ***required*** to mitigate concerns over projected system electrical demands in the ENA. As written, the Alberhill Project Objectives explicitly render non-substation

alternatives unacceptable merely because they lack a substation ***even if*** they mitigate electrical demand concerns and have lower associated impacts than the proposed project. FRONTLINES would not challenge Objectives 2 and 3 if the DEIR had bothered to demonstrate (based on substantial evidence) that constructing a new substation and a new 115 kV system are the *only* way to address the reliability concerns associated with the transformer overloads at Valley South, but the DEIR failed to do so. To the contrary, both the DEIR and CAISO state categorically that non-substation alternatives would address all of these reliability concerns.[14, 15] Therefore, FRONTLINES contends that Objectives 2 and 3 are deficient because they eliminate any basis for considering a reasonable range of alternatives (including non-substation alternatives) in violation of CEQA.

Objective 2 Deficiencies: SCE wants a new 500 kV substation; SCE's entire purpose and goal for the Alberhill Project is to construct a new 500 kV substation, and toward that end, SCE has cited reliability concerns stemming from transformer overloads at the Valley South substation. However, constructing a new 500 kV substation is not, ***and cannot be***, the Commission's objective in either a moral, legal, or technical sense because the Commission is tasked by the Public Utilities Code with the heavy purpose of approving only projects that are *needed* and the Commission is tasked by CEQA to ensure that such *needed* projects minimize significant environmental impacts to the greatest extent feasible. Therefore, the Commission's objectives must be based *solely* on the reliability concerns which give rise to SCE's justification of the Alberhill project; namely, potential overloads on the Valley South transformers. This is the only way to ensure that the Commission approves a project that properly addresses the need objectives established by the Public Utilities Code and properly minimizes impacts as required by CEQA. The DEIR fails to do this, and in fact it does the opposite because it takes SCE's demand for a new substation and embeds it firmly

---

14 See page 4 of CAISO's decision on the Alberhill project issued December 9, 2009, which states that simply adding another transformer will eliminate the overload potential on the existing transformers. The only criticisms that CAISO has for this alternative are completely groundless, towit: 1) that it would exceed SCE's substation design practice of limiting substations to 3 load carrying transformer banks which is not true because Valley South substation only has 2 transformer banks now, so adding another one is consistent with SCE design practice; 2) That it increases further loss of load exposure which is not true because three transformers at one substation is a standard design practice for SCE, therefore stating that this configuration "increases load loss exposure" is tantamount to concluding that all of SCE's substations "increase load exposure" because they are consistent with SCE's design practice of constructing a maximum of 3 load-carrying transformers at a substation; 3) That it does not "create any new 115 kV system ties". However (and as explained elsewhere in these comments), all of these criticisms are erroneous.

15 Appendix D at page 35 states that adding a third transformer at Valley North would address all the reliability concerns that are identified in the DEIR. The only criticism that the DEIR levies is that it does not provide a new 500/115 kV substation (and therefore does not create a new 115 kV system) nor does it provide new system ties to the new substation system. This illustrates FRONTLINES entire point regarding the DEIR's deficient project objectives, which cause a perfectly reasonable alternative that meets all the reliability concerns to be rejected simply because it does not provide the substation that SCE demands.

within the project objectives even while contemporaneously acknowledging that non-substation alternatives will fully address the reliability concerns identified in Objective 1 [DEIR Appendix D page 35]. Simply put, the DEIR has effectively "rubber stamped" SCE's demand for a new substation by simply adopting it (in its entirety) as a Project Objective.

Objective 3 Deficiencies: Objective 3 addresses the need to maintain "ties" between a "new115-kV System" and the Valley South 115-kV System. The "new 115-kV system" demanded by Objective 3 exists only if the new substation demanded by Objective 2 is constructed, because it is precisely the new substation mandated by Objective 2 which creates the "new 115-kV system" addressed by Objective 3. Therefore, Objective 3 is merely an extension of Objective 2, and Objective 2 creates the ""system ties" that Objective 3 "maintains". In other words, Objective 3 does not exist without Objective 2, and Objective 2 creates the need for Objective 3. Therefore, Objective 2 and Objective 3 are "two faces of the same coin" and are essentially identical in that they both require a new substation and neither can be met without a new substation. Because Objective 3 is merely an extension of Objective 2, it suffers from the same deficiencies of Objective 2 because it mandates the construction of a "new 115 kV system" (and therefore a new substation); as such, it artificially constrains the range of alternatives to only those which provides a new substations and improperly eliminates non-substation alternatives.

The deficiencies that FRONTLINES notes in Objectives 2 and 3 is rendered obvious and undeniable by the DEIR's treatment of Alternative F (which adds a third transformer at Valley South). Specifically, the DEIR finds that Alternative F "would relieve projected electrical demand" [App D page 35] and is "feasible from a technical, legal, and economic perspective" [App D page 36]. It also has fewer associated impacts compared to the proposed project [App D page 37 and Table 6]. Nonetheless, this alternative was rejected simply because it "would not include a new 500/115-kV substation within the Electrical Needs Area or maintain system ties" that are demanded by Objectives 2 and 3 [DEIR Appendix D page 35]. The fact that the DEIR eliminates Alternative F solely because it fails to provide a new substation and (by extension) new "system ties" even though it achieves the project reliability objectives proves FRONTLINES point and specifically spotlights the substantial deficiencies that occur in Objectives 2 and 3.

The unreasonable constraints imposed by Objectives 2 and 3 render the DEIR's alternatives analysis meaningless and are utterly contrary to an extensive body of case law that 1) requires Project Objectives to accurately reflect the actual underlying purpose of the project and 2) limits the extent to which SCE's desire for a new substation can dictate what constitutes a "feasible" Project Alternative. (See *North Coast Rivers Alliance v. Kawamura*

(2016), *Preservation Action Council v. City of San Jose* (2006) 141 Cal App 4th 1336, 1351-2; *Uphold Our Heritage v. Town of Woodside* (2007) 147 Cal. App. 4th 587, 595 fn. 4; and *Save Round Valley Alliance v. County of Inyo* (2007) 157 Cal. App. 4th 1437, 1460.) The Alberhill Project Objectives 2 and 3 are deficient because they embody and mandate SCE's intent to construct a new 500 kV substation to such an extent that they narrow the range of "feasible" alternatives to only those which supply a new substation, thereby eliminating non-substation alternatives which successfully address the electrical concerns that form the underlying purpose of the project itself. To ensure that a reasonable range of Alberhill Project alternatives (including non-substation alternatives) are properly considered pursuant to CEQA, the Project Objectives must be modified to properly reflect the reliability concerns that stem from potential overloads of the Valley South transformers, and not constrained unnecessarily to only those alternatives that provide SCE with the substation that it demands

3.2 The DEIR Alternatives Analysis fail to properly address the 20+ miles of 115 kV Infrastructure Included in the Alberhill Project

SCE's PEA clarifies that the proposed Alberhill project creates a "new 115 kV Alberhill system" consisting of five 115 kV substations that will be transferred from the existing Valley South system [page 1-10, Section 1.3.2.1 of SCE's PEA dated September 30, 2009]. It further clarifies that, in order to facilitate this transfer, many miles of new and modified 115 kV transmission lines will be constructed [page 3-11]. The DEIR precisely establishes that 20.5 miles of new 115 kV lines would be required by the "new 115-kV system" (via segments ASP 1,1.5, 2, 3, 4, 5, 6, 7, and 8 listed in DEIR Table 2-2) *in addition to* a 12.7 mile portion of the 115 kV Valley-Ivyglen project (segments VIG1, 2 and 3) that extends from Valley South to the City of Lake Elsinore *which is also a required element of the 115 kV Alberhill system* [DEIR Figure 2-3].

The facts clearly set forth in SCE's PEA conclusively demonstrates that ***all*** of the 115 kV infrastructure which is included in the proposed Alberhill project is solely and exclusively needed to accommodate the new 500 kV substation and the "new 115-kV system" that SCE wishes to build. This is because:

1. The "new 115 kV system" disconnects the Skylark substation from the Tenaja substation, which leaves Tenaja to be unreliably served by a single 115 kV line from the Stadler substation to the south. This must be mitigated by constructing segments ASP 5, 6, and 7 to provide a new 9 mile 115 kV line to serve Tenaja from Valley South; and

2. SCE's design standards require three 115 kV connections to reliably serve the Fogarty, Elsinore, Skylark and Newcomb substations which comprise most of the "new 115 kV system". This can only be accomplished by constructing Segments ASP 2, 3 and 4 to provide a new 11 mile 115 kV line transmission line connection to the new 500 kV substation.

Reconciling all these facts, it becomes clear that it is the proposed 500 kV substation itself which drives the requirement to construct the 20+ miles of 115 kV transmission line included as Segments ASP 1-8 in the proposed Alberhill project. It is equally clear that, without the new 500 kV substation, there is no need to construct the 20+ miles of 115 kV lines that is included in the proposed Alberhill Project as segments ASP 1- 8. However, these facts are completely missed by the DEIR, which explicitly assumes that Segments ASP 1-8 will still be constructed (in whole or in part) for every alternative that is considered, *including alternatives that do not include a new 500 kV substation.*

For instance, consider the alternative in which a new transformer is added to the Valley South substation. Appendix D establishes this as Alternative E, and it states that, for this alternative, Segments ASP5, ASP6, and ASP7 would still be constructed between Skylark and Newcomb "to make use of the additional 115-kV electricity made available by installation of a new Valley South transformer" [page 34]. This statement is *ridiculous* because it suggests that the existing 115 kV system between Skylark and Newcomb is insufficient to accommodate its own future electrical demand! Nowhere is such an assumption supported anywhere with data or factual information in either the DEIR or in SCE's PEA documentation. This statement also completely ignores the fact that the sole purpose of ASP 5, 6 and 7 is to facilitate integration of a new 500 kV substation *which is not an element of Alternative E*.

FRONTLINES notes that nowhere does the DEIR ever demonstrate (or even contend) that the transmission capacity of the existing 115 kV lines between Skylark and South system is insufficient to support their own projected 115 kV electrical demand, and it certainly does

not provide any data to support such a broad statement.[16] This statement is *entirely* unsupported in the DEIR, and it is in fact utterly contrary to the DEIR's primary stance that the existing 115 kV Valley South system will soon *not get enough* power from Valley South because of transformer limitations.

FRONTLINES contends that the DEIR cannot have it both ways; it cannot claim on the one hand that the Valley South substation is insufficient to accommodate future electrical demand in the existing 115 kV Valley South system, and then turn around and claim on the other hand that the existing 115 kV Valley South system is insufficient to accommodate future electrical demand provided by the Valley South substation.

Notably, Appendix D attempts to substantiate its claim that the existing 115 kV Valley South system is insufficient by clarifying that SCE states "within a few years, an additional 15 miles of 115-kV subtransmission lines that are approaching capacity would also need to be reconductored" [page 34]. The problem is, this statement is not *supported* anywhere in the record, therefore it lacks credibility. More importantly, this assertion by the DEIR raises key questions that must be resolved before it can be accorded any weight. For example, when will this existing capacity be exceeded? If this is expected to occur within the 10 year planning horizon, why was it not included in the project being considered in the DEIR? Is this assumption based on SCE's electricity demand projections? If so, wouldn't that show this assumption is highly suspect, given the rampant errors in SCE's peak demand forecasts (as noted above)?

For all these reasons, FRONTLINES disputes entirely the manner in which the DEIR addresses the 115 kV infrastructure included in the Alberhill 500 kV substation project, and FRONTLINES particularly disputes the contention expressed in Appendix D that a project alternative which does not include a new 500 kV substation would still be burdened with the construction of new 115 kV facilities that are intended solely to accommodate a new substation.

---

[16] If the existing 115 kV system capacity is indeed insufficient to support its own projected electrical demand, then it appears to FRONTLINES that this is a much bigger and broader concern than what is addressed by the DEIR, and if true, it would require the DEIR to be significantly expanded to address this broader concern. However, FRONTLINES notes that this concern is only mentioned in one line buried in an Appendix to the DEIR, and further notes that there is no factual evidence provided anywhere in the DEIR to support this concern. Therefore FRONTLINES concludes that this concern is not legitimate and should therefore be accorded no weight.

3.3 The DEIR Alternatives Analysis Does not Properly Consider the Reduced Impacts of Alberhill Project Alternatives that do not Include a new 500 kV Substation.

As explained previously, it is the proposed Alberhill 500 kV substation itself which drives the need for the 115 kV infrastructure (segments ASP 1-8) included in the proposed Alberhill project. Therefore, alternatives to the Alberhill project which do not include a new 500 kV substation are not burdened by the 115 kV infrastructure that the Alberhill project requires.

Nonetheless, the DEIR improperly assumes that new 115 kV facilities are required even for alternatives that do not include a new 500 kV substation. Worse yet, the DEIR uses this erroneous assumption as the basis for allocating unwarranted significant impacts to these project alternatives, and on that basis, rejects them!

Take for example Alberhill Project alternative E, which simply adds a new transformer to the Valley South substation and eliminates all reliability concerns related to overloads on the two existing transformers. The environmental impacts that would reasonably be expected to occur as a result of this alternative stem from the construction activities at the Valley South substation which are necessary to install the transformer and modify the existing bus arrangement to integrate the new transformer. However, the DEIR's assessment of Alternative E impacts goes far beyond this. In fact, the DEIR concludes that the environmental impacts of this alternative are only slightly less than the impacts generated by the proposed Alberhill Project itself! [Appendix D Table 6] This is because the DEIR Appendix D "sandbags" Alternative F with 26 miles of new 115 kV infrastructure, [page 36] even though such infrastructure is not *at all* necessary for, or required by, Alternative F. The DEIR simply comments that this 26 miles of new 115 kV infrastructure is included simply "to make output from an additional Valley South transformer usable". As discussed above, this ridiculous assumption (which explicitly infers that the existing 115 kV infrastructure in the Valley South system is so lacking that it cannot even support its own projected electrical demand) is not supported by any power flow data or other relevant facts presented in the DEIR. In fact, this assumption is purely speculative conjecture that is not supported by a shred of evidence anywhere in the record of this proceeding. Therefore it violates CEQA *on its face.*

CEQA is clear; the DEIR must rely solely on "substantial evidence" to support any conclusion it makes regarding whether a project (or a project alternative) will have a significant effect on the environment. The CEQA Guidelines state clearly that argument, speculation, unsubstantiated opinion or narrative does not qualify as "substantial evidence" [Section 15384]. The CEQA Statute states categorically that "Substantial evidence shall include facts, reasonable assumptions predicated upon facts, and expert opinion supported by facts" [Section 21082.2].

The DEIR does not provide *any* evidence (let alone "substantial" evidence) that 26 miles of new 115 kV infrastructure is a required element of Alternative E. The DEIR also ignores the factual evidence provided in SCE's PEA which clearly demonstrates that new 115 kV infrastructure is only a required element in alternatives which include a new 500 kV substation. Clearly, the DEIR's assumption that Alternative E include 26 miles of new 115 kV infrastructure has no basis in fact and is utterly contrary to CEQA. Therefore, the DEIR must be revised to properly reflect that the environmental impacts created by Alternative E are limited to construction impacts at the Valley South substation, thereby rendering Alternative E as the least impactful alternative considered for the Alberhill project.

FRONTLINES is also troubled by the following statement regarding Alternative E that is found on page 37 of Appendix D: "Approximately 5 of the 26 miles of 115-kV subtransmission line would be located near SR-74, which is an eligible State Scenic Highway (Caltrans 2011). However, it is assumed that the net effect on aesthetics would be reduced under this alternative because the 115-kV subtransmission lines to be reconductored along SR-74 already exist". This statement is patently false, because *there are no* 115 kV transmission lines located along a 5-mile stretch of SR-74, and *there will not be* any 115 kV transmission lines located along a 5-mile stretch of SR-74 unless the Commission approves the proposed Valley-Ivyglen project. FRONTLINES contends that the Valley-Ivyglen project is not needed to meet the stated project objectives, and recommends alternatives that create significantly less environmental impacts. FRONTLINES is disturbed by the fact that Appendix D presupposes that the Valley-Ivyglen project is already approved and fully constructed as proposed.

4.0 PROJECT ALTERNATIVES MEETING CEQA-COMPLIANT PROJECT OBJECTIVES.

Assuming that the Alberhill Project Objectives are revised to properly comply with CEQA (as discussed above), FRONTLINES offers the following project alternatives, which meet all the reliability concerns addressed in the DEIR and generate significantly less environmental impacts than the proposed Alberhill and Valley-Ivyglen projects.

4.1 FRONTLINES Recommended Alberhill Project Alternative.

FRONTLINES agrees with CAISO that adding a third transformer to the Valley South substation will address all of SCE's 500/115 kV transformer overload concerns on the Valley South system[17]. And, as discussed in the previous section, this alternative creates negligible environmental impacts compared to the proposed Alberhill project because it does not include any new construction or infrastructure modifications outside the footprint of the Valley South substation. And, based on SCE's recent energy demand profiles coupled with current planning and development trends within Riverside County and in the City of Lake Elsinore, this Alternative provides an ample capacity increase on the existing Valley South. For all these reasons, FRONTLINES recommends an Alberhill Project alternative which simply adds a third transformer at the Valley South substation (as shown in the figure on the next page)

The advantages of FRONTLINES' Recommended Alberhill Alternative are many:

- It eliminates ALL the significant impacts created by the proposed Alberhill Project.
- It reliably and fully serves the entire Valley South load throughout (and beyond) the 10 year planning horizon.
- It forestalls construction of costly and environmentally damaging infrastructure by fully addressing peak demand concerns through modifications to the Valley South substation.
- It provides a prudent alternative to a costly and environmentally damaging project that is supported solely by dubious and unreliable SCE peak demand projections.

---

[17] See Alternative 2 identified in Table 1 of CAISO's Decision on the Alberhill project dated December 9, 2009 found here: http://www.caiso.com/Documents/091216DecisiononAlberhillSubstationProject-Memo.pdf

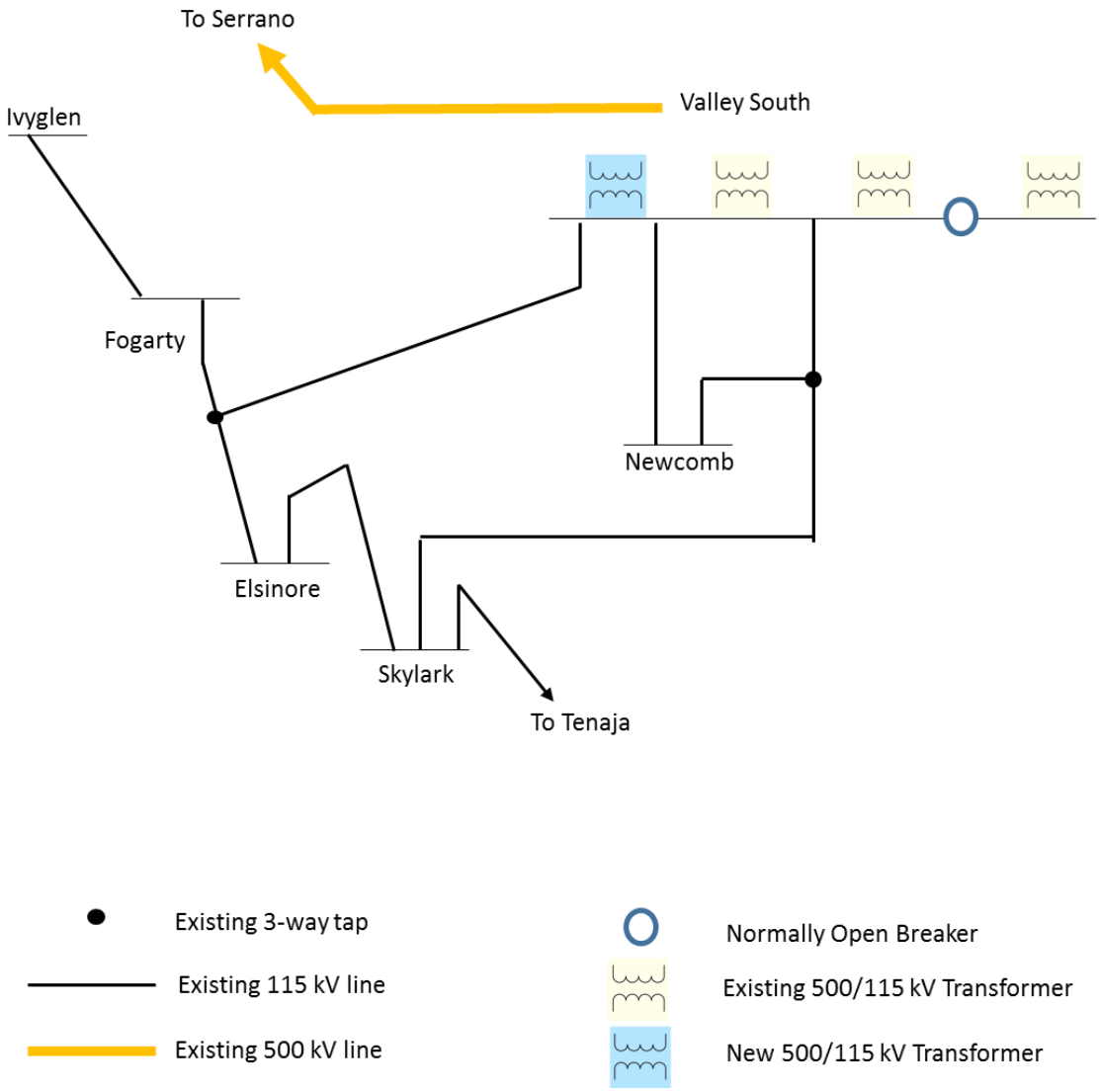

FRONTLINES notes that the DEIR, CAISO, and even SCE consider this project alternative to be technically feasible. And, because this alternative eliminates virtually all the environmental impacts of the proposed project and costs less than $50 million, it is certainly environmentally and economically feasible. Every aspect of this alternative is demonstrably superior to the proposed Alberhill project, therefore it merits consideration as the environmentally superior choice.

4.2 **FRONTLINES Recommended Valley-Ivyglen Project Alternatives.**

According to the DEIR, the purpose of the Valley-Ivyglen Project is "to ameliorate reliability concerns associated with the existing single 115-kV subtransmission line that serves Fogarty and Ivyglen substations as well as to eliminate the potential for 115-kV system overloads resulting from the loss of a 115-kV element within the *Electrical Needs* Area" [page 1-3 at 3]. Consistent with this purpose, the DEIR sets forth the following Valley-Ivyglen Project Objectives [page 1-9 at 12]:

1. Serve projected electrical demand in the Electrical Needs Area (ENA);
2. Increase electrical reliability to the Electrical Needs Area by providing a direct connection between SCE's Valley Substation and SCE's Ivyglen Substation; and
3. Improve operational and maintenance flexibility on 115 kV subtransmission lines without interruption of service.

The DEIR contends that SCE's proposed Valley-Ivyglen project achieves these project objectives because it will "relieve loads on the existing Fogarty–Ivyglen 115-kV subtransmission line" and "provide a second source of power to Ivyglen Substation by creating a second 115-kV connection between Valley Substation and Ivyglen Substation" and increase operational flexibility by "increasing the applicant's ability to transfer load between 115-kV substations within the Electrical Needs Area" [page 1-3 beginning at 7]. It is clear from these statements that an alternative which provides Ivyglen with a second power source via a direct 115 kV connection from the Valley substation and which relieves load on the existing Fogarty-Ivyglen line will explicitly increase reliability and operational flexibility in a manner that fully achieves the stated Project Purpose.

FRONTLINES' recommended alternative to SCE's proposed Valley-Ivyglen project provides a second power source to the Ivyglen substation and it fully addresses SCE's overload concerns on the existing Elsinore-Fogarty tap line to Valley South. FRONTLINES' recommended alternative involves the following 3 step approach:

1. Disconnect the existing 115 kV line extending from Valley South to the tap point (located between the Elsinore and Fogarty substations – see figure 1 above for configuration).

2. Replace the existing 115 kV single circuit line between Ivyglen and the Valley tap point with 115 kV double circuits; route one of the lines into Fogarty, and route the second line into Ivyglen as depicted in the figure below. These lines are configured to connect Valley directly to Ivyglen, which ensures that Ivyglen is reliably served even if a contingency event removes the Fogarty substation from service.

3. Replace the existing conductor on the 115 kV line extending from Valley South to the tap point (between the Elsinore and Fogarty substations) with "high temperature/low sag" ("HTLS") conductor *without structure replacement*. This will increase the transmission capacity by more than 30%, and accommodate all of the projected peak demand increases that are forecast by SCE and which are indicated in DEIR Table 1-2.

Alternatively, the existing 115 kV line in the existing ROW between Valley South and the Valley tap point can be replaced with double circuit lines; one line connects to the tap point, and the second line is routed to Ivyglen as described above. This alternative would be electrically identical to SCE's proposed project. Both of these alternatives are illustrated on the following page.

FRONTLINES notes many advantages to these Valley-Ivyglen Alternatives, including:

- They eliminate the new transmission corridor and ROW required by the proposed Valley-Ivyglen project (and by extension all the significant impacts created by this new corridor and ROW) by utilizing existing 115 kV ROW corridors.

- They preserve the scenic viewshed along SR-74.

- No helicopter usage is needed to construct them, because they are all along existing 115 kV ROWs that SCE has previously constructed without helicopters, therefore SCE has no need to use helicopters for their reconstruction.

- They improve operational flexibility by providing two 115 kV lines to each substation and allows SCE to transfer load between distribution lines and substations within the Electrical Needs Area.

- They reliably and fully serve the entire Valley South load throughout (and beyond) the 10 year planning horizon.

- They avoid the construction of an entirely new transmission line in an entirely new transmission right of way.

- They fully comply with the Garamendi Principal for siting transmission lines.

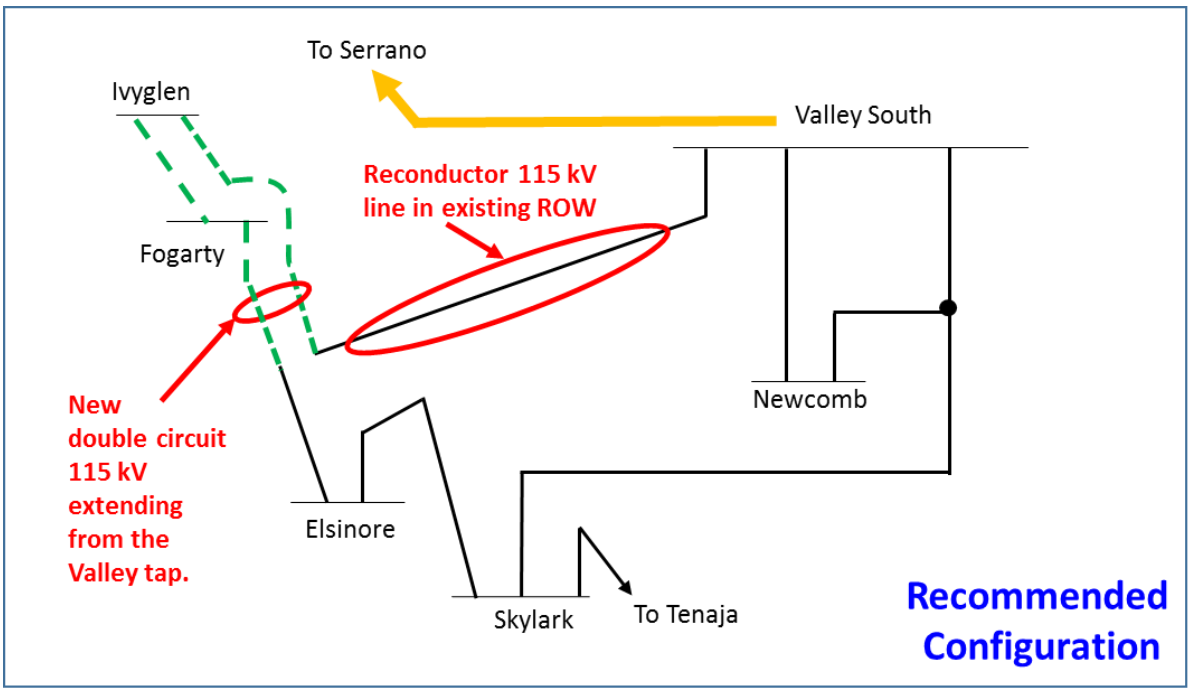
To Serrano
Ivyglen
Valley South
Reconductor 115 kV line in existing ROW
Fogarty
New double circuit 115 kV extending from the Valley tap.
Newcomb
Elsinore
Skylark
To Tenaja
Recommended Configuration

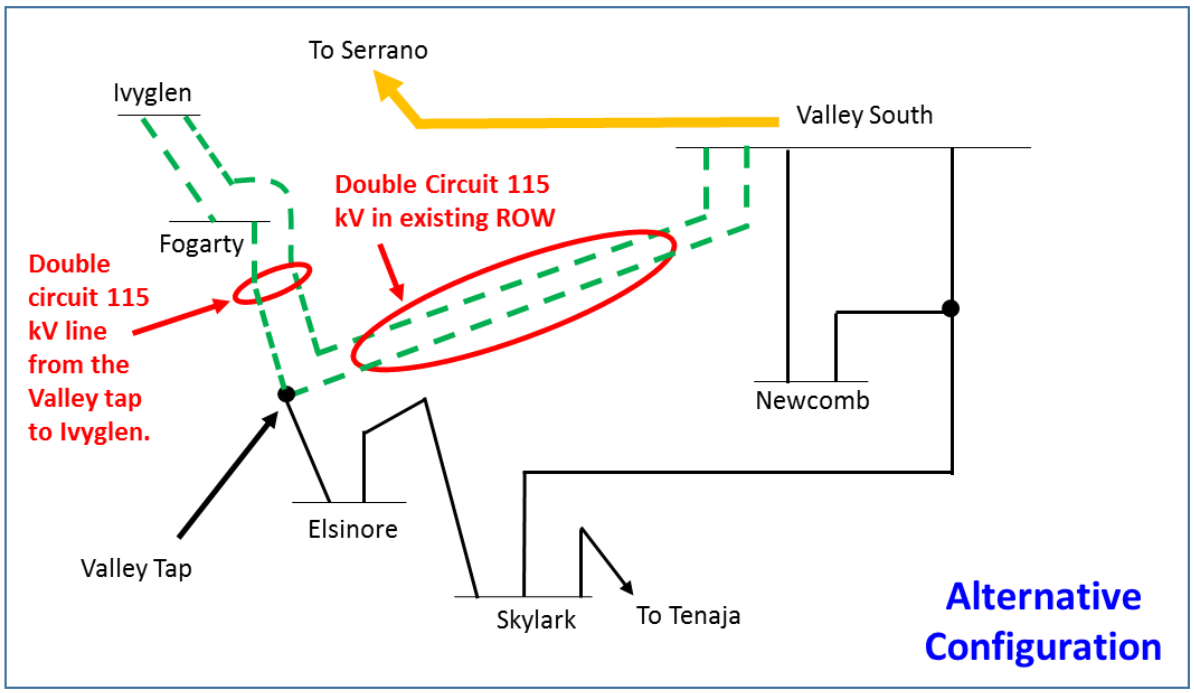
To Serrano
Ivyglen
Valley South
Double Circuit 115 kV in existing ROW
Fogarty
Double circuit 115 kV line from the Valley tap to Ivyglen.
Newcomb
Elsinore
Valley Tap
Skylark
To Tenaja
Alternative Configuration

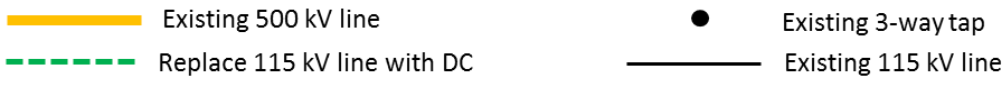
Existing 500 kV line
Replace 115 kV line with DC
Existing 3-way tap
Existing 115 kV line

- They provide a prudent alternative to a costly and environmentally damaging project that is supported solely by SCE's dubiously unreliable peak demand projections.

The DEIR demonstrates that it is technically feasible to replace the existing single circuit 115 kV line between Fogarty and Ivyglen with double circuit infrastructure (as FRONTLINES recommends) because SCE's Valley-Ivyglen project proposes to do just that as part of Segment VIG7[18]. This replacement is achieved by using temporary "shoefly" structures as described in DEIR section 2.4.5.4.

Therefore, FRONTLINES' recommended alternatives to the Valley-Ivyglen project are technically feasible. Moreover, they present negligible environmental impacts compared to SCE's proposed Valley-Ivyglen Project because they eliminate all requirements for new ROW and they construction to already impacted areas adjacent to existing ROW, and they obviates any potential need that SCE may claim for the use of blasting or helicopters. They also involve much less infrastructure and ROW acquisition, and are therefore less costly than SCE's proposed Valley-Ivyglen Project, thus demonstrating that FRONTLINES' recommended alternatives are certainly environmentally and economically feasible. In fact, every aspect of FRONTLINES recommended alternatives appears superior to SCE's proposed Valley-Ivyglen Project, and therefore it merit consideration as "environmentally superior".

FRONTLINES also suggests that the DEIR consider a Valley-Ivyglen project alternative in which helicopters are not authorized, given the extensive and deleterious impacts created by helicopter use (as discussed in detail in Section 6).

FRONTLINES also points out that SCE's overload concerns can be addressed to a large extent by simply increasing the transmission capacity of the existing line by 30%. This can be accomplished by replacing the existing, low capacity conductor that is currently on the Elsinore-Fogarty tap line to Valley South with high transmission low sag conductor ("HTLS") that has the same weight and diameter as the existing conductor (and therefore

---

18 Specifically, the DEIR states (with emphasis added) "Segment VIG7 would be constructed within the existing Fogarty–Ivyglen 115-kV line ROW. *The existing single-circuit 115-kV structures would be replaced with double-circuit 115-kV structures*". [page 21 at 12]

does not require structure replacement). This will achieve the capacity increase even beyond what SCE claims is needed over the next 10 years[19].

Regarding the DEIR's "Environmentally Superior" Alternative C: It places VIG6 along Temescal Canyon road to Horsethief Canyon Road. From this point, it proceeds to connect to VIG7 by heading southwest under the 15 Freeway along Horsethief Canyon Rd, then west along De Palma Road, whereupon it crosses back over the 15 Freeway to again connect with Temescal Canyon Road. The latter (which involves an entirely new ROW along the length of De Palma Road AND an entirely new transmission crossing over the 15 Freeway) seems both unnecessary and a violation of the Garamendi Principals because the line could just continue along Temescal Canyon Road (where the existing Fogarty-Ivyglen ROW occurs) from where "Environmentally Superior" Alternative C ends at Horsethief Canyon Road. From that point, VIG7 could proceed by either replacing the existing single circuit Fogarty-Ivyglen structures with double circuit structures or it could simply be placed underground

4.3 FRONTLINES' Recommended Combined Project Alternatives.

To address all of the reliability concerns expressed by the DEIR for the proposed Alberhill Project and the Proposed Valley-Ivyglen Project and to provide operational flexibility and accommodate projected peak demand through (and beyond) the 10 year planning horizon, FRONTLINES recommends the two system configurations depicted below, both of which include a third transformer at Valley South and double circuit HTLS lines to Ivyglen. These alternatives provide reliability and operational flexibility because they ensure that every 115 kV substation on the Valley South system is served by at least two transmission lines. It also provides *multiple redundancy* for the Newcomb, Skylark, Elsinore, Fogarty and Ivyglen substations by serving these substations via three or four 115 kV connections to the Valley South substation.

---

[19] SCE reports that the existing capacity on the Elsinore-Fogarty tap line to Valley South is 184 MVA, which (at 115 kV operation) corresponds approximately to an ampacity of 920-930 A. Assuming the existing conductor is the stranded aluminum conductor that SCE usually uses, it is likely the conductor is either a 954 kcmil conductor ("magnolia" or "goldenrod" type) or a 900 kcmil conductor ("snapdragon" or "cockscomb" type). In either case, replacing the existing stranded aluminum conductor with an ACSS/TW conductor (such as the "tern") or an ACSS/AW conductor (such as the "woodduck") that has a similar conductor diameter and weight will increase the capacity by 30%.

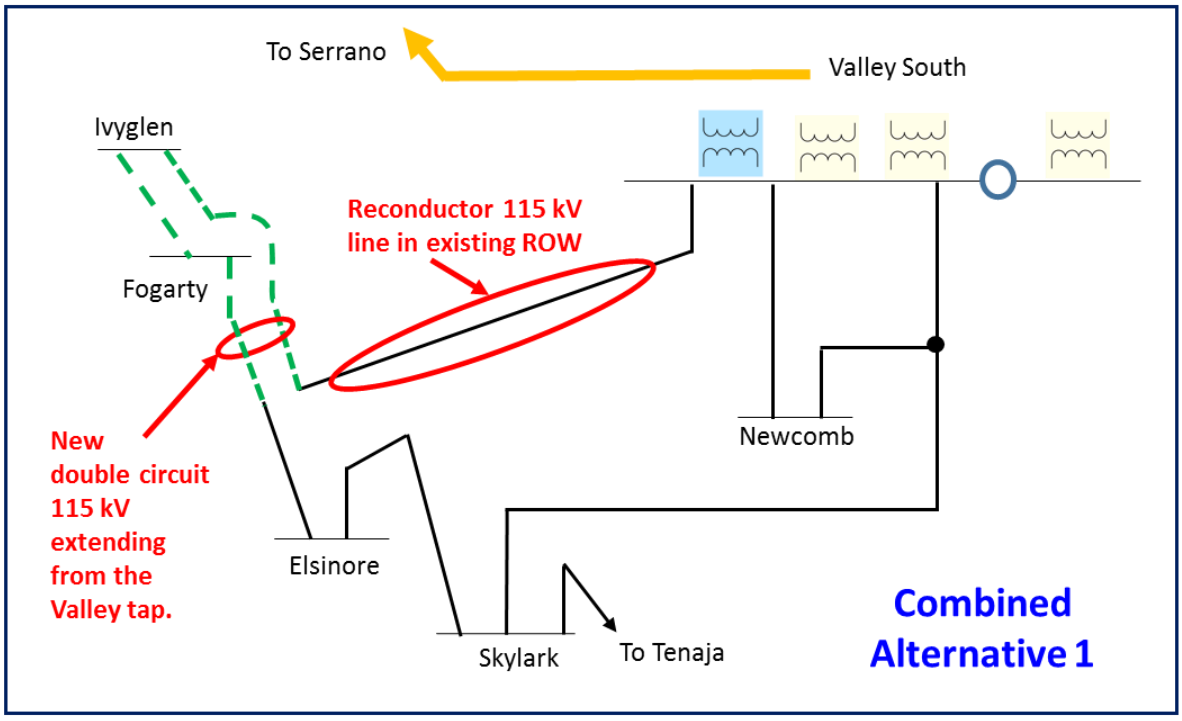
To Serrano
Valley South
Ivyglen
Reconductor 115 kV line in existing ROW
Fogarty
New double circuit 115 kV extending from the Valley tap.
Newcomb
Elsinore
Skylark
To Tenaja
Combined Alternative 1

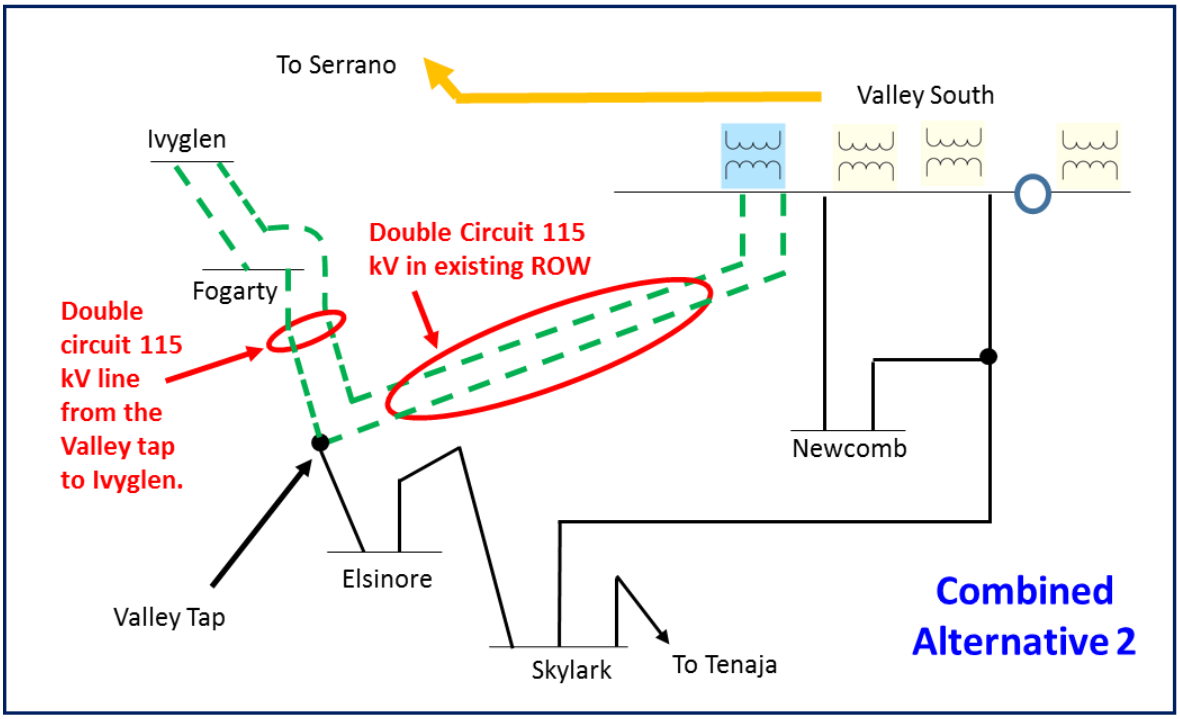
To Serrano
Valley South
Ivyglen
Double Circuit 115 kV in existing ROW
Fogarty
Double circuit 115 kV line from the Valley tap to Ivyglen.
Newcomb
Elsinore
Valley Tap
Skylark
To Tenaja
Combined Alternative 2

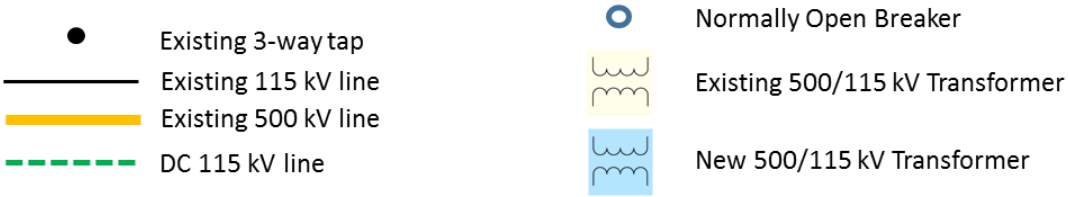
Existing 3-way tap
Existing 115 kV line
Existing 500 kV line
DC 115 kV line
Normally Open Breaker
Existing 500/115 kV Transformer
New 500/115 kV Transformer

5.0 THE DEIR'S ANALYSIS OF SCE'S REQUESTED HELICOPTER USE IS GRAVELY DEFICIENT.

FRONTLINES notes that there are so many deficiencies in the DEIR's analysis of SCE's requested helicopter use that it is almost difficult to know where to begin. First and foremost, FRONTLINES observes that the DEIR does not even bother to ascertain whether SCE's requested helicopter use is a "convenience" or a "necessity". This is crucial, because if SCE's requested helicopter use is merely a convenience, then it must not be approved if there is even the slightest chance that SCE's helicopter use would create significant impacts. FRONTLINES concludes that SCE's requested helicopter use (which is essentially limited to constructing the Valley-Ivyglen project) is in fact a convenience and not a necessity because the Commission previously approved the Valley-Ivyglen project without the use of helicopters, so SCE is clearly able to proceed with the project without relying on helicopters at all.

Other deficiencies that FRONTLINES noted in the DEIR's analysis of SCE's requested helicopter use include:

- The DEIR makes no attempt to even justify the use of helicopters despite the significant impacts that they create.
- The DEIR substantially understates the extent to which SCE intends to use helicopters.
- The DEIR fails to consider the intrinsic dangers associated with SCE's proposed helicopter use.
- The DEIR substantially underestimates the noise impacts created by SCE's proposed helicopter use.
- The DIER substantially underestimates the air quality impacts created by SCE's proposed helicopter use.

These deficiencies are set forth in more detail below

5.1 The DEIR Fails to Explain or Justify SCE's Requested Helicopter Use.

SCE's Petition simply states [page 7] "SCE proposes to use several new construction methods and related equipment (i.e. shoeflies, blasting, or helicopters)." SCE presents this

as a perfunctory issue and does not even bother to explain why helicopter construction methods are requested. Clearly, SCE presumes that its use of helicopters to construct the Valley-Ivyglen Project is a foregone conclusion that need not be justified in any way. In fact, the word "helicopter" appears only three times in the entire petition. FRONTLINES is offended by SCE's presumption that the Commission would give little regard to something as highly impactful as the continuous and routine use of low flying and hovering helicopters over and adjacent to residential areas for more than 2+ years. More importantly, FRONTLINES contends that SCE's requested helicopter use will create significant and continual noise impacts on residential and commercial areas and will pose substantial safety risks to all the communities along the Valley-Ivyglen project route throughout the entire 27 month construction period of the Valley-Ivyglen Project. This contention is based in part on extensive records[20] pertaining to SCE's helicopter use on other transmission projects which explicitly demonstrate that SCE's practice is to continually deploys multiple helicopters every day from sunrise to sunset throughout the entire length of the construction effort, and rather than flying around residential areas, SCE's helicopters routinely hover over residential properties at less than 100 feet day in and day out. SCE even routinely deploys helicopters in residential areas during times and in areas which are *explicitly prohibited* by governing environmental documents.

The DEIR assumes (wrongly) that SCE has requested the use of helicopters because there are areas along the Valley-Ivyglen project that have "limited access". This assumption is abjectly false, because every single segment of the "Environmentally Superior Alternative" identified in the DEIR is adjacent to a network of access roads (including segment VIG1 which the DEIR describes as "hilly" [page 2-27]). Worse yet, the DEIR does not even bother to strengthen this erroneous assumption by constraining SCE's helicopter use to only those areas deemed to have "limited access". The DEIR grants SCE unfettered and unlimited helicopter use whenever, wherever and however it chooses, and it does so under the false pretense that SCE only intends to use helicopters in "limited access" areas.

---

20 These records were obtained through a complaint proceeding [C.12-09-002] initiated by the Acton Town Council pursuant to implementation of the TRTP project.

FRONTLINES has every reason to believe that, if the Commission grants SCE proposed helicopter use on the Valley-Ivyglen project, SCE will deploy the helicopters in the same highly impactful way and to the same highly impactful extent that it has used helicopters on other transmission projects. Therefore, FRONTLINES insists that the Final Valley-Ivyglen Project EIR properly and thoroughly justify SCE's requested helicopter use, describe precisely how and why such helicopter use is needed, and conclusively demonstrate that the Valley-Ivyglen project cannot be constructed without the use of helicopters.

5.2 Helicopters are not Necessary to Construct the Valley-Ivyglen Project.

The DEIR authorizes helicopter operations (which includes takeoff, landing, and hovering) on the Valley-Ivy Glen Project for "materials delivery" and "hardware installation" along the entire length of Segments VIG1, VIG4, VIG5, VIG6 and VIG7 [see page 2-64 at 40; see also page 2-56 at 31], and it authorizes the use of helicopters for these purposes ***without limit***. In prior proceedings, the CPUC has only authorized the use of helicopters for transmission line construction when credible evidence is provided which demonstrates that the use of helicopters will substantially eliminate new road construction or significantly reduce biological resource impacts. This is because: 1) Helicopters generate significant noise impacts within 1,500 feet of their operation (as discussed in more detail below); and 2) Helicopters generate significant criteria and air toxic pollutant emissions as a result of their engine emissions and the ambient dust they generate while taking off, landing and hovering. FRONTLINES notes that the DEIR does not provide a shred of evidence that helicopter use is even necessary on any portion of the Valley-Ivyglen project. FRONTLINES further notes that all the Valley-Ivyglen segments where helicopter use is proposed are located entirely within disturbed areas near exiting streets and residential access roads and are therefore entirely accessible via ground equipment, towit:

VIG1: Is located entirely within disturbed areas along an existing SCE ROW that has an existing and abundant network of access roads. It is also surrounded by existing residential uses. As shown in the attached Figures 2a, 2b, and 2c, the eastern portion of VG1 (extending from the Valley Substation to Byers Road) is located in flat terrain adjacent to an extensive network of residential and industrial access roads (both paved and unpaved). As shown in the attached Figures 2d and 2e, the western portion of VG1 is located on gently sloping terrain that is also covered with an extensive network of existing access roads. From an elevation of 1440 feet at approximately Byers Road, the east portion

of Segment VG1 extends to State Route 74 on sloping terrain that is disturbed and already developed with rural residential and equestrian uses and which is covered with access roads that are used by both residents and motorsport enthusiasts. The entire route can be easily traversed by any type of vehicle, therefore full access via the existing road network is feasible. It is quite clear that helicopters are not needed for either "materials delivery" or "hardware installation" anywhere along VIG1. It is equally clear that the use of helicopters for "materials delivery" and "hardware installation" will result in continual and excessive noise and dust impacts on all the residential and equestrian uses along both sides of the new ROW because helicopters will be continually flying over these residences and hovering at low altitudes immediately adjacent to these residences for extended periods of time.

VIG4: Is located entirely within disturbed areas along existing roadways except a 1400 foot section that crosses undeveloped land between Pasadena Avenue and Riverside Drive. This undeveloped land is flat and entirely accessible by vehicle, therefore helicopters are not needed for "materials delivery" or "hardware installation" anywhere along VIG4.

VIG5: Is located entirely within disturbed areas along existing roadways, therefore helicopters are not needed for "materials delivery" or "hardware installation" anywhere along VIG5.

VIG6: Is located along existing roadways in disturbed areas except the portion between Hostettler Road and Horsethief Canyon Road. If the "Environmentally Superior" Alternative C is implemented, the entire length of VIG6 would be accessible by vehicle, therefore helicopters would not be necessary for "materials delivery" or "hardware installation" anywhere along VIG6.

VIG7: Is located entirely within disturbed areas and adjacent to existing roadways and it is entirely accessible by vehicle. Therefore, helicopters are not needed for "materials delivery" or "hardware installation" anywhere along VIG7.

FRONTLINES also notes that SCE does not propose the use of helicopters to construct Segments VIG2, VIG3, and VIG8, nor does proposed to construct any of the 115 kV facilities included in the Alberhill project using helicopters except a small section of Segment ASP5. It is not clear why the residences and businesses in these areas will be spared the deleterious impacts of SCE's helicopter use, while residences and businesses in other areas will be forced to endure the helicopter impacts throughout the 2+ year construction program. Regarding the Alberhill 115 kV facilities that SCE proposed to construct using helicopters, the DEIR states that "the applicant would install conductor on the proposed 115-kV subtransmission lines using a line truck instead of a helicopter to string the sock line." [page 2-65 at 13]. If SCE can rely on the existing road network to deliver materials and install hardware and conductors for the Alberhill project and on Segments VIG2, VIG3,

and VIG8, then it can use the existing road network to deliver materials and install hardware and conductors on Segments VIG1, VIG4, VIG5, VIG6 and VIG7 as well.

5.3 SCE'S 2014 Project Modification Report Confirms that SCE's Helicopter Use Will Be Far More Widespread than what is Assumed in the DEIR.

The 2014 Project Modification Report submitted by SCE in support of its petition affirms FRONTLINE' contention that SCE's intends to use helicopters extensively throughout the entire Valley-Ivyglen project area and that the helicopter noise impacts will extend far beyond the "staging areas" as assumed by the DEIR. According to this report, SCE intends to land or hover helicopters at *every* construction location and at *any* location within a proposed 115 kV ROW and for *any* purpose recommended by the "installation contractor". The PMR states (with emphasis added):

> The Proposed Modifications also include the use of helicopters to support construction activities in areas where ground access is limited or system outage constraints are a factor. Helicopter activities may include transportation of construction workers, delivery of equipment and materials **to structure sites**, **structure placement**, **hardware installation**, and **conductor and/or optical ground wire stringing operations**. Helicopters could be used in other areas to facilitate construction**, dependent upon recommendations by the installation contractor** …. In addition, helicopters may need to land within the subtransmission line's right-of-way, which may include landing on access or spur roads [page 3.10-10].

SCE has an established track record for using helicopters to construct transmission lines which demonstrates SCE's clear preference for landing and/or hovering helicopters everywhere along a transmission corridor. SCE has routinely deployed helicopters to continuously land on and hovered over residential sites ***hundreds of times*** without cause or need because the sites were all entirely flat and fully accessible by existing roads. SCE has even landed helicopters in, and spent hours hovering over, residential areas where helicopter use was expressly and explicitly prohibited by the governing environmental documents.

FRONTLINES is troubled by the naivety expressed by the DEIR which assumes SCE's helicopter use will be relatively benign. History shows that ***nothing could be further from the truth***. FRONTLINES is even more troubled by the fact that the DEIR does not bother to impose one single restriction on SCE's helicopter use, nor does it even attempt to

condition SCE's helicopter use in a manner that ensures compliance with the DEIR's usage assumptions. To the contrary, the DEIR authorizes SCE to use helicopters whenever, wherever, and however it deems appropriate, even though the DEIR's impact analysis of SCE's helicopter use assumes limited use and therefore negligible impact. FRONTLINES points out that this violates a foundational element of CEQA, which prohibits an EIR to authorize any project element (such as the unlimited helicopter use that SCE seeks) without first fully comprehending the scope and extent to which the project element poses significant environmental impacts, and mitigate them accordingly.

5.4 The DEIR Fails to Consider the Danger Posed by Helicopter Operations.

The use of helicopters by California Utilities to construct transmission lines is quite dangerous and poses risks to both individuals and entire communities. For example, a wind gust flipped an SCE helicopter during takeoff from a staging area during Segment 1 construction on the Tehachapi Renewable Transmission Project. The incident (photographed below) killed a technician, destroyed a fuel truck, and resulted in an extensive release of jet fuel, diesel, and other hydrocarbons[21]. The staging area where the incident occurred is located in a Very High Fire Hazard Area where constant winds and heavy wind gusts are common, and is near established residential neighborhoods. The



21 CPUC report #48 & #49: http://www.cpuc.ca.gov/Environment/info/aspen/antelopepardee/reports.htm. See also https://aviation-safety.net/wikibase/wiki.php?id=54559

incident could have resulted in a ***deadly*** conflagration; but rain had fallen shortly before the incident, which (fortunately) reduced the fire danger. According to an incident report "winds at the accident site most likely exceeded the maximum wind allowed with reference to the helicopter's prevailing wind envelope, which resulted in the helicopter lifting to the left and rolling over".

SCE is not the only utility with a poor helicopter safety record. In fact, SDGE's helicopter operations on the Sunrise project became so dangerous that the Commission actually halted all helicopter construction efforts and grounded all of SDGE's helicopters until the safety risks were addressed. The Sunrise helicopter incidents included multiple rotor strikes, dropping materials from great heights three times in a two week period, and other dangerous activities[22].

FRONTLINES also points out that the helicopter operations authorized by DEIR along the entire length of Segment VG1 and other portions of the Valley-Ivyglen project will entrain and disperse quantities of dust throughout the adjacent residential neighborhoods. This creates not only an air quality problem for residents, but also a very real and very significant health threat from Valley Fever, which is an incurable and debilitating disease which is spread by earth disturbance and is found in Riverside County and throughout arid regions of the southwest[23].

The inherent risks that helicopter operations pose to life, health, and property are substantial and must be accorded significant weight in the DEIR. It is axiomatic that helicopter operations should NOT be authorized by the Commission unless the applicant has made a substantial showing that helicopter use is *required* for transmission line construction based on credible evidence that no other transportation modes are reasonable. Above all, the Commission must NOT authorize helicopter operations that provide merely a convenience to utilities like SCE.

---

22 See: http://www.sandiegouniontribune.com/news/2011/sep/27/state-grounds-sunrise-powerlink-helicopters/ and http://www.eastcountymagazine.org/grounded-cpuc-orders-shut-down-helicopter-activities-sunrise-powerlink

23 See for example http://www.checkorphan.org/news/riverside-county-not-immune-valley-fever

5.5 Errors in the DEIR's Analysis of Helicopter Noise Impacts.

The DEIR Wrongly Assumes that Helicopter Noise Impacts are Limited to Staging Areas.

The DEIR authorizes helicopter operations (including takeoff and landing) for "materials delivery" and "hardware installation" along the entire lengths of VIG1, VIG4, VIG5, VIG6 and VIG7 (see page 2-64 at 40). Despite the extensive and unbounded helicopter use that is granted to SCE, the DEIR erroneously concludes that helicopter noise impacts will be limited to the vicinity of the staging areas based on the fact that these areas are where frequent landings and take-offs will occur. The DEIR states [pg 4.11-29] "most of the noise effects associated with helicopter use would occur at those receptors located in the vicinity of staging areas, since these areas would be used for landing and take-off at a frequent basis." This is incorrect. As shown below, all receptors located within 1000 feet on either side of the VIG1, VIG4, VIG5, VIG6 and VIG7 corridors AND all receptors located within 1000 feet of a helicopter flight path will experience noise levels that exceed the 75 dBA significance threshold established for the Valley-Ivy Glen project.

1. The DEIR authorizes helicopter overflights, takeoffs and landings everywhere along the entire lengths of Segments VIG1, VIG4, VIG5, VIG6 and VIG7 without restriction or limit[24]. This essentially grants SCE unlimited helicopter flight, landing, and takeoff operations at each and every one of the ***hundreds*** of transmission tower sites along Segments VIG1, VIG4, VIG5, VIG6 and VIG7. And, even if the DIER is amended to preclude helicopter landings at each tower site, it would still authorize SCE to hover for prolonged periods around each tower site to make deliveries and install hardware. According to the DEIR, a Hughes 500C helicopter flying at 500 feet will generate a noise level of 82.3 dBA at a location 492 feet from the flightpath[25]. This means that a receptor located within 700 feet of any flying Hughes 500C will experience noise levels exceeding 82 dBA[26]. It must also be recognized that the noise level is not significantly

---

[24] Page 2-64 at 40 states: Light-duty helicopters may be used along 115-kV Segments VIG1 and VIG4 to VIG7 for materials delivery, hardware installation, and wire stringing". These helicopter operations "include takeoff and landing" and are authorized in areas "near construction sites within the 115-kV Valley–Ivyglen General Disturbance Area".

[25] The DEIR states that the type of helicopter SCE intends to employ for the VIG Project produces "82.3 dBA measured at 150 meters (492 feet) from the flight path" when in "level flyover at 500 feet and 130 miles per hour" [pg 4.11-29 at 22 and footnote 5 with typographical error corrected].

[26] This is because a receptor that is located 492 lateral feet from a 500 foot flight path is actually 700 feet from the aircraft itself. Therefore, any receptor located within 700 feet of a helicopter that is flying, hovering, landing, or taking off will experience noise levels exceeding 80 dBA.

reduced when the separation distance increases. For example, increasing the separation distance to 1000 feet reduces the noise level by only 4 dBA [27]. It is therefore certain that every single receptor located within 1000 feet of either side of the ROW on Segments VIG1, VIG4, VIG5, VIG6 and VIG7 will be continually subject to significant (>75 dBA) noise impacts throughout the entire 2+- year construction program to accommodate SCE's "materials delivery" and "hardware installation" at these locations. The DEIR errs in assuming significant noise impacts are limited to staging area vicinities; it must be revised to properly recognize that significantly adverse noise impacts will extend more than 1000 feet on either side of the entire length of the VIG1, VIG4, VIG5, VIG6 and VIG7corridors.

2. Even if a helicopter does not actually land at a particular tower site, it will hover for several minutes at or below an altitude of 75 feet for "materials delivery" and "hardware installation". Hovering helicopters out of "ground effect" draw more power to retain altitude, and are therefore louder than helicopters in level flight. It is therefore likely that receptors located within 1,500 feet of any tower site will continually experience noise levels exceeding 75 dBA due to hovering helicopters.

3. The DEIR does not define what "materials delivery" or "hardware installation" is. On other transmission projects (such as the Tehachapi Renewable Transmission Project "TRTP"), SCE has construed "delivery" to mean not only material delivery to tower sites, but also workers to tower sites. SCE has even used helicopters to deliver *lunches* to workers on towers. SCE helicopter operations employed for "materials delivery" and "hardware installation" on transmission line construction projects can involve up to hundred flights per day to the construction area. If the CPUC authorizes SCE to use helicopters for "materials delivery" and "hardware installations", then the EIR must be amended reflect the fact that SCE will make ***at least*** 20 helicopter deliveries to each and every transmission tower along the entire lengths of segments VG1, VGI4, VGI5, VGI6 and VGI7. This translates to **several thousand** helicopter trips along the Valley-Ivy Glen project ROW which will continually, significantly, and adversely affect every single receptor within at least 1500 feet of the ROW throughout the entire 2+ year Valley-Ivyglen construction program.

---

[27] See Figure 7-14 of "Non Military Helicopter Noise Study – Report to Congress" published by the FAA in 2004 and found here: http://www.faa.gov/regulations_policies/policy_guidance/envir_policy/media/04nov-30-rtc.pdf. See also Appendix A tables from http://oai.dtic.mil/oai/oai?verb=getRecord&metadataPrefix=html&identifier=ADA148110

4. Given the proximity of the Valley-Ivy Glen helicopter staging areas to Segments VIG1, VIG4, VIG5, VIG6 and VIG7, the helicopter flight trajectories are not likely to exceed 500 feet. Therefore, all receptors located under and within 1,000 feet of these low-level flight paths will experience significantly adverse noise levels exceeding 75 dBA (including the extensive residential areas along VIG1, VIG5, VIG6, and VIG7 and the educational, commercial, and industrial areas along VIG4). The DEIR must be amended to recognize the significant noise impacts that will be experienced at all of the residences located throughout the area bounded by SCE's mapped helicopter staging areas and segments VG1, VGI4, VGI5, VGI6 and VGI7 because SCE's helicopters must fly over them to get to the construction area, and will continually do so at very low altitudes every day throughout the entire 2+ year construction program. The DEIR fails to consider any of these significant noise impacts, and is therefore deficient.

5. The DEIR fails to consider the significant noise impacts that SCE's requested helicopter use will have on the Ortega High School and many commercial and industrial uses within the City of Lake Elsinore. The DEIR authorizes ***three*** helicopter staging areas within 700 feet of the Ortega High School (Staging Areas VIG 6, 13, and 14); one of these staging areas is actually *next door* to the campus. Yet, the Noise Impact section of the DEIR (Section 4.11) does not appear to even consider the existence of Ortega High School, let alone how it will be impacted by SCE's helicopter use. These staging areas also adjacent to existing commercial and industrial businesses that which will be forced to contend with a continual stream of helicopters flying within feet of their rooftops and landing within 200 feet of their front doors every day throughout the entire 2+ years of the Valley-Ivyglen construction program. Yet (and incredibly) none of this is addressed in the DEIR.

<u>Mitigation Measure MM NV-1 Will Not Mitigate Helicopter Noise Impacts.</u>

As demonstrated above, noise levels generated by helicopter operations at receptor points located within 1000 feet of a flight trajectory or within 1000 feet of Segments VIG1, VIG4, VIG5, VIG6 and VIG7 will exceed 75dBA. Therefore, mitigation measure MM NV-1 applies to all of these receptor locations. MM NV-1 mandates the following:

"If noise from construction and maintenance equipment will result in noise levels in excess of 75 dBA at the closest residential receptor's property line, the applicant shall implement additional noise reduction measures, including the use of portable noise absorption screens surrounding the specific work area and a staggered construction work practice as needed, to ensure that noise levels in areas close to sensitive receptors are within an acceptable range (i.e., 65 to 75 dBA, to the extent technically and economically feasible)."

Unfortunately, none of the noise reduction measures identified in MM NV-1 can be applied to helicopter operations. In fact, the DEIR fails to identify a single credible mitigation measure that will successfully reduce helicopter noise to an acceptable level. The fact that helicopter noise cannot be mitigated, coupled with the fact that helicopters are merely a convenience (not a necessity) for the Valley-Ivy Glen project supports FRONTLINES contention that helicopter operations should not be allowed at all for the Valley-Ivy Glen Project.

<u>The DEIR Does Not Properly Address Helicopter Noise Impacts On Equestrian Uses.</u>

There are a number of equestrian facilities located along most of the Valley-Ivyglen project ROW and staging areas where helicopter use is authorized by the DEIR. These facilities will be significantly impacted by the helicopter uses proposed for the Valley-Ivy Glen project because horses are extremely sensitive to the loud noises and sudden sound impulses created by helicopter flyover and hovering events. The DEIR does address livestock (cattle and sheep) impacts, but does not consider them to be significant because "animals readily adapt to reasonable levels of continuous sound, such as white noise and miscellaneous sounds. Additional studies conducted to evaluate behavioral and physiological response to noise have reported signs of habituation to noise over 5-day-exposure trials". The problem with this analysis is that it ignores the fact that helicopter flight operations do not generate "continuous sound" or "white noise". To the contrary, helicopter flight operations generate sudden and intense sound profiles that are intermittent in nature, can evoke a violent "startle" response, and which are not easily habituated to by horses. The Valley-Ivy Glen project DEIR must be amended to either reflect these concerns. Alternatively, the DEIR should be revised to prohibit the use of helicopters to construct the Valley-Ivy Glen facilities since it appears that SCE's requested helicopter use is a convenience and not a necessity.

5.6 The DEIR Does Not Properly Quantify Helicopter Emissions.

A review of the air emission spreadsheets prepared for the Valley-Ivyglen Project [see the 2 excel spreadsheets found at the end of Appendix B) reveals that the DEIR assumes that helicopter emissions will occur only during conductor installation. This is incorrect. As clearly set forth in the DEIR Project Description (Chapter 2), unlimited helicopter use authorized throughout the entire 2 year construction program for any and all "material

delivery" and "hardware installation" needs that may occur on Segments VG1, VGI4, VGI5, VGI6 and VIG7). The fact that the DEIR authorizes unrestricted and unlimited helicopter use for the Valley-Ivyglen project must be reflected in the Air Quality Impacts section of the DEIR. Therefore, the Valley-Ivy Glen project emission calculations must be amended and expanded to include unlimited helicopter use throughout the entire 2 year construction program. Based on SCE's established habit of continually flying multiple helicopters every day throughout a transmission line construction project, FRONTLINES recommends that the air emissions presented in the DEIR be revised to assume *at least* 3 helicopters flying all day, every day, for the entire 2+ year Valley-Ivyglen construction program. Alternatively, the DEIR can be amended to prohibit the use of helicopters to construct the Valley-Ivy Glen facilities since it appears that SCE's requested helicopter use for the Valley-Ivy Glen project is a convenience and not a necessity.

6.0 SCE "COMMITMENTS" ARE NOT RECOGNIZED BY CEQA, ARE NON-BINDING, AND WILL NOT BE PROPERLY IMPLEMENTED BECAUSE THEY ARE GENERALLY LEFT ENTIRELY TO SCE'S DISCRETION.

According to Table 2-12 of the DEIR, SCE has made a number of "commitments" which, among other things, address noise impacts (identified as "Commitment H"[28]) and aircraft safety (identified as "Commitment G"). However, these "commitments" are not necessarily binding on SCE, and FRONTLINES contends that many of them will be ineffective because the DEIR leaves their implementation to SCE's discretion. FRONTLINES also notes that a many of the "commitments" identified in Table 2-12 have, in other transmission projects approved by the Commission, been designated as required mitigation measures that were set forth explicitly as conditions of approval. It is not clear why the Commission has chosen to relax these standards for the Alberhill and Valley-Ivyglen projects (though FRONTLINES notes that *some* of the "commitments" are incorporated in the MMP as mitigation measures as is the case for MM BR-7, which incorporates "Commitment D"). FRONTLINES is doubtful that these "commitments" will serve as intended, and is in fact aware of numerous

---

[28] For reasons that are not clear, the "Commitment H" stated on page 2-90 of the DEIR differs from the "Commitment H" identified in Section 4.11. FRONTLINES is relying on the version found on page 2-90, but recommends that this discrepancy be addressed in the Final EIR

instances where SCE has made similar commitments on other transmission line projects (referred to as "Applicant Proposed Measures" or "APMs" rather than "commitments"), then chosen not to implement them even though it was reasonable and feasible to do so. In the following paragraphs, FRONTLINES specifically addresses SCE's "Noise Commitments" and "Aircraft Safety commitments". Though FRONTLINES focusses on these "commitments" in particular, the general concerns regarding implementation that are raised in the following paragraphs should be construed as generally applicable to all of the SCE "commitments" enumerated in Table 2-12 of the DEIR.

6.1 SCE's Noise "Commitment H".

Commitment H-1 states:

> "All construction and general maintenance activities, except in an emergency, shall be limited to the hours of 7 a.m. to 7 p.m. and prohibited on Sundays and all legally proclaimed holidays. SCE will obtain all relevant ministerial or non-discretionary noise permits from local jurisdictions. In the event that construction activities are necessary on days or hours outside of what is specified by the local ordinance, SCE would provide five-day advanced notification, including a general description of the work to be performed, location and hours of construction anticipated, to the CPUC, the local jurisdiction, and residents within 300 feet of the anticipated work, as well route all construction traffic away from residences, schools and recreational facilities to the extent feasible."

As a preliminary matter, FRONTLINES contends that this should be a requirement that is imposed as a mitigation measure by the EIR; it should *not* be left to SCE to decide whether to implement this condition. FRONTLINES would also like to point out that, when constructing the Tehachapi Renewables Transmission Project, SCE often operated equipment and flew helicopters within residential neighborhoods beginning at daylight on Sundays. This was done as part of SCE's construction routine even though the TRTP expressly prohibited such activities[29] . FRONTLINES further points out that, while the first line of this "commitment" states that SCE will not operate outside these prohibited hours except in emergencies, the follow-up sentences make it clear that SCE intends to operate

[29] See Section 2.2.3 of Complaint filed by the Acton Town Council in proceeding C.12-09-002.

during the prohibited hours at any time that SCE deems "necessary", and will simply provide a "five-day advanced notification" and obtain "relevant ministerial or non-discretionary noise permits" prior to undertaking such activities. FRONTLINES can think of no emergency situation that would allow SCE to provide a 5-day advance notice and obtain the permits that it commits to here, so it is obvious that SCE does not intend to limit its operations to certain acceptable days and hours. FRONTLINES contends that SCE should be prohibited from operating outside the timeframes established in the first sentence, and that this should be imposed as a condition of the project and not left as a mere "commitment" that SCE can choose to disregard.

Commitment H-2 states:

> "Construction equipment shall use noise reduction features (e.g., mufflers and engine shrouds) that are no less effective than those originally installed by the manufacturer."

FRONTLINES contends that this "Commitment" should be imposed by the DEIR as a condition of the project. Even then, FRONTLINES notes that it will do nothing to protect residences and businesses from the oppressive noise impacts that will be created by SCE's requested helicopter use.

Commitment H-3 states:

> "Construction traffic shall be routed away from residences and schools, where feasible".

History shows that this "commitment' provides no protection from noise impacts on SCE's transmission line construction project because SCE often deems it infeasible to route around schools and residents even when an EIR explicitly *requires* SCE to do so[30]. It certainly appears that SCE will find it generally infeasible to implement this particular commitment on both the Alberhill and the Valley-Ivyglen projects because the project sites themselves lie adjacent to residences and schools. So in truth, this "Commitment" will amount to nothing at all.

---

30 See page 9 of Complaint filed by the Acton Town Council in proceeding C.12-09-002.

Commitments H-4 and H-8:

> "Unnecessary construction vehicle use and idling time shall be minimized to the extent feasible. The ability to limit construction vehicle idling time is dependent upon the sequence of construction activities and when and where vehicles are needed or staged. A "common sense" approach to vehicle use shall be applied: if a vehicle is not required for use immediately or continuously for construction activities, its engine should be shut off. Note: certain equipment, such as large diesel-powered vehicles require extended idling for warm-up and repetitive construction tasks."
>
> "The applicant would minimize engine idling and turn off engines when not in use".

These two "commitments" appear to disagree. The first simply minimizes idling "where feasible" and implements a "common sense" approach that is left to SCE to establish; the second mandates the minimization of idling t at all times and even requires that engines be turned off whenever they are not in use. Clearly, the second "commitment" is more effective and therefore appropriate. FRONTLINES contends that the second "commitment" should be imposed as a condition of the project and not merely left as a "commitment" that SCE can simply choose to not implement.

Commitments H-5 and H-9:

> "The applicant will notify all receptors within 500 feet of construction of the potential to experience significant noise levels during construction."
>
> "Where blasting is required for the Alberhill system Project, the applicant would conduct additional pre-blast notification and coordination with residents, utilities, and others that may be affected by blasting operations. "

While these "commitments" are laudable and should be imposed by the DEIR as actual approval conditions and not left as a "commitment" that SCE can ignore when convenient, FRONTLINES observes that they do not actually mitigate impacts. Blasting operations in particular are incredibly disruptive, and SCE should be not be allowed to use blasting measures during work hours in commercial and industrial areas. Also, as it did during blasting operations on the TRTP project, SCE should be required to offer temporary relocation assistance to families in blast-noise impact areas. Finally, it appears that SCE intends to implement Commitment 9 pertaining to blasting operations only on the Alberhill project, though FRONTLINES understands that SCE intends to use blasting on both the

Alberhill and the Valley-Ivyglen projects. Therefore, FRONTLINES contends that any blasting protection measures that are imposed on SCE as part of the Alberhill project should also be imposed on SCE as part of the Valley-Ivyglen Project.

Commitments H-6 and H-7:

> "During construction, the applicant will use a temporary noise barrier that blocks the line of sight between the construction area and the residence areas where sensitive receptors would be subjected to significant noise impacts."
>
> "The applicant would shield small stationary equipment with portable barriers within 100 feet of residences, where feasible."

These two "commitments" appear to disagree. The first requires the use of noise barriers in residential areas that fully block the line of site from an entire construction area, while the second asserts that portable barriers will only be used if feasible and if small stationary equipment is used within 100 feet of a residence. Clearly, the first "commitment" is more effective and therefore appropriate. FRONTLINES contends that the first "commitment" should be imposed as a condition of the project and not merely left as a "commitment" that SCE can simply choose to not implement.

6.2 SCE's Aircraft Safety "Commitment G".

"Commitment G" states:

> "Prior to construction, the applicant [SCE] shall consult with the Federal Aviation Administration and ensure the filing of forms and associated specifications per the requirements of Federal Aviation Regulations Part 77 (Objects Affecting Navigable Airspace). The applicant shall review all recommendations and/or determinations from the FAA and mark and/or light the FAA recommended components where the applicant finds they are reasonable and feasible. "

FRONTLINES is particularly disturbed by this "commitment", which allows SCE to decide where FAA lights will be installed without any notice to, or input from the public. FAA lights are intended to be brightly visible from a distance of 3 miles, therefore when placed adjacent to a residential area, they are *extremely* disturbing and cause significant light intrusions into residential spaces. In the Draft Supplemental environmental document prepared for the TRTP project, the issue of FAA lights was addressed. During the public

comment period, a comment was submitted to the Commission warning that the illumination from FAA lights is astoundingly bright, and it would have a significantly adverse impact on any residences in the area due to the glaringly bright incident light. The Commission was asked to mitigate this impact by requiring that the lights be shielded to prevent light incidence on nearby homes. This was a reasonable request, because the lights are intended to be seen from aircraft flying at elevation, so the installation of shielding to prevent visibility from surrounding residences below the transmission towers would not interfere with their operation or impair their aircraft warning capabilities. The Final EIR declined this request for mitigation measures based on the mistaken understanding that the FAA lights are only supposed to direct light upward and outward. Specifically, the FEIR stated:

> "A description of the lighting structures is found in Section 2.3.2.1 (FAA Lighting Types), where it is stated "L-810 and L-864 lights have focused beacons which would direct light upward and outward toward potential aviation traffic without creating illumination of nearby areas directly below the lights." As the lights are designed to direct light upward and outward, no bottom shields are proposed or necessary as mitigation"

The FEIR was wrong. As shown in the figures below, the lenses on both the L-810 lights and the L-864 are specifically configured to emit light over a nearly complete 360° spheroid; they are explicitly ***not*** designed to solely "direct light upward and outward".

An L-864 light



L-810 lights



Naturally, this error was not discovered until after the towers were constructed and the lights were installed. The lights were so bright and resulted in such significant light intrusions into the surrounding homes that it could often not be mitigated with curtains, blinds, or any other standard window treatment. To cope with the problem, some homes simply boarded up their windows. Following construction, SCE was asked to retrofit the lights with shielding, but SCE refused. At a public meeting in early 2015, an SCE staff member admitted that the FAA lights were never actually required by the FAA, and were in fact installed by SCE's "choice". Based on this information, SCE was again asked to remove the lights or at least shield them. Again SCE refused.

There is no doubt that the installation of FAA lights anywhere along the Valley-Ivyglen or Alberhill projects will cause significant adverse impacts on the surrounding residences. As such, CEQA demands that these impacts be fully addresses in the EIR, which must include details regarding where these lights will be installed and how light intrusion into structures on the ground in the surrounding areas will be fully mitigated.

There is also no doubt that relegating the selection and placement of FAA lights solely to SCE's discretion as part of SCE's "Commitments" will prove disastrous for all the residential areas that are adjacent to any portion of the Alberhill and Valley-Ivyglen areas. SCE has an established track record of installing these FAA lights whenever and wherever it chooses irrespective of whether the FAA actually requires them, and it does to without mitigation or regard for residential impacts. By leaving such decisions solely to SCE without Commission direction or public input, the Commission abrogates its own statutory obligations under CEQA, and (worse yet) leaves the residents of Riverside County entirely at the mercy of SCE's "discretion".

7.0 CONCLUSION

FRONTLINES respectfully requests that all the facts set forth above be factored into the Final EIR that is issued for the Alberhill and Valley-Ivyglen projects. And, based on all the facts provided above, FRONTLINES recommends that the DEIR be revised to reflect the following:

The Commission's reliance on SCE's peak demand forecast data as a basis for approving enormous and costly transmission projects such as Alberhill and Valley-Ivyglen should be ***heavily*** tempered by the fact that SCE's forecasts are demonstrably inaccurate and markedly inconsistent with recent planning documents adopted by the County of Riverside and the City of Lake Elsinore.

Adjust the Alberhill Project Objectives to ensure that a reasonable range of alternatives (including "non-substation alternatives") is adequately considered and not rejected merely on the basis that they do not provide the 500 kV substation that SCE demands, particularly since both CAISO and the Commission recognize that non-substation alternatives will fully address all of SCE's reliability concerns pertaining to transformer overload issues at the Valley South substation. This modification is required to ensure compliance with both CEQA and the California Public Utilities Code.

Based on a properly devised set of Project Objectives for the Alberhill Project, expand Section 5 to include an alternative that adds one new transformer at the Valley-South substation, and recognize that the impacts of this new alternative do not extend beyond the footprint of the Valley South substation, thereby rendering this alternative as the "Environmentally Superior" alternative for the Alberhill Project.

Expand Section 5 to include an alternative to the Valley-Ivyglen project that utilizes existing 115 kV ROW corridors to construct a direct 115 kV connection between Valley South and Ivyglen, and recognize that that the impacts created by new alternative are limited to areas already burdened with 115 kV infrastructure, and that said impacts are substantially less than those created by any alternative considered in the DEIR (other than the "no project" alternative) because they do not involve the development of new transmission corridors and (by extension) new and significant impacts to areas not currently burdened with 115 kV infrastructure (such as scenic highway SR-74).

Revise Section 4 to properly recognize that, based on the placement of SCE's proposed helicopter staging areas and their relation to SCE's proposed helicopter construction corridors, SCE's requested helicopter use will continually create significantly adverse impacts on all the residences and businesses throughout all the Valley-Ivyglen project every day during the entire 2+ year construction period.

Revise Section 4 to properly recognize that helicopter noise impacts will not be limited merely to staging areas and will in fact result in helicopter landing, take-off, and hovering activity at every pole location and between all pole locations along and even beyond segments VIG1, VIG4, VIG5, VIG6 and VIG7VI, and that it will result in continual helicopter overflights in residential and commercial business areas at altitudes far below 500 feet, which will continually expose all these areas to noise levels exceeding 75 dBA.

Revise Section 4 to recognize the extensive equestrian uses along the proposed Valley-Ivyglen project ROW and to properly assess the devastating impacts of SCE's requested helicopter use that will continuously be experienced throughout the entire 2+ year construction period.

Revise the Air Quality analysis portion of Section 4 to properly reflect the fact that the DEIR authorizes unlimited use of multiple helicopters throughout the entire Valley-Ivyglen construction period that is 2+years in length, and revise the estimated criteria and air toxic pollutant emissions to properly reflect the significant emissions that this helicopter use will generate.

Revise Section 4 to address the safety risks and hazards to life and property that are posed by SCE's requested helicopter use and properly consider the recent and demonstrably poor safety record that Southern California utilities like SCE and SDGE have in using helicopters on in transmission line construction projects. Specifically, take note of SCE's fatality record, and the fact that the Commission deemed SDGE's helicopter use to be such a safety concern that it grounded SDGE's helicopters. In addition, revise Section 4 to reflect the fact that these safety and hazard impacts are easily mitigated by precluding the use of helicopters,

and that such mitigation is reasonable and appropriate because SCE has requested the use of helicopters merely as a convenience and not a necessity.

Revise Section 5 to include an alternative in which all construction on the Alberhill and Valley-Ivyglen projects is completed without the use of helicopters, and find that such an alternative substantially reduces significant impacts and that it is entirely feasible based on the fact that SCE requests the use of helicopters on the Alberhill project to a very limited extent, and the fact that the Commission has already approved the Valley-Ivyglen project without the use of helicopter, thereby demonstrating that SCE is perfectly capable of constructing these projects without helicopters.

Revise the EIR and the MMP to ensure that the implementation of mitigation measures is *never* left to SCE's discretion and, after revising SCE's "Commitments" to eliminate conflicting language less protective measures, convert these "Commitments" into substantive and legitimate conditions of approval.

Expand Section 4 to properly consider the significantly adverse impacts associated with the operation of FAA lights, and preclude their installation an all instances where such lights are not explicitly required by the FAA. Additionally, for those locations where the FAA requires the installation of lights, adopt adequate mitigation measures which eliminate light intrusions into residential spaces and ensure that light emitted by the fixtures required by the FAA only shines only vertically and transversely and does not illuminate areas below or adjacent to the tower. Such mitigation measures must include (but are not limited to) shielding which precludes all light incident in areas that are below the elevation at which the light is affixed. Above all, the EIR must be revised to ensure that decisions regarding the configuration and placement of FAA lights DO NOT rest with SCE, and are instead subject to public review, comment, and mitigation based on documented evidence that these lights create permanent and significantly adverse impacts and that SCE has an established track record of installing these lights in residential areas where they are not required by the FAA and refusing to shield or otherwise modify them to mitigate their significant impacts.

On behalf of FRONTLINES, I am happy to respond to any questions that arise from the facts and information provided herein; my contact information is provided below.

Respectfully submitted.

/S/ Jacqueline Ayer

Jacqueline Ayer
On behalf of FRONTLINES
2010 West Avenue K, #701
Lancaster, CA 93536

(949) 278-8460

THE GIARDINELLI
LAW GROUP, APC

JOHN V. GIARDINELLI
SYLVIA J. SIMMONS
KELLY A. NEAVEL

OF COUNSEL:
JAMES E. KLINKERT
PAUL J. GUTIERREZ
GLEN J. BIONDI

Please reply to the Riverside County Office

June 13, 2016

California Public Utilities Commission
RE: VIG/ASP
Attn: Kristi Black, Environmental Specialist
c/o Ecology and Environment, Inc.
505 Sansome Street, Suite #300
San Francisco, CA 94111

Fax: (415) 398-5326
Email: VIG.ASP@ene.com

California Public Utilities Commission, Energy Div.
Attn: Jensen Uchida, CPUC Project Manager
505 Van Ness Avenue
San Francisco, CA 94102

Fax: (415) 703-2200
Email: jensen.uchida@cpuc.ca.gov

Comments on Draft EIR for Ivyglen and Alberhill Projects by Developer, Castle & Cooke

Dear Ladies and Gentlemen:

This office has the privilege of representing Castle & Cooke, the Developer of a substantial portion of the Alberhill Project described in the Draft Environmental Impact Report. Your staff should be commended for their diligent work in compiling the Draft EIR for the Ivyglen and Alberhill Projects (DEIR). The extensive information therein is a valuable tool for the public's understanding of the projects and their potential impacts.

We have reviewed the DIER with regard to its Alberhill Project impacts on Castle & Cooke's development and on the City of Lake Elsinore. Specifically, the following comments concern VIG5 and ASP2 as those areas relate to the development of that area for residential use by our client, Castle & Cooke. We have six (6) general items of concern for that area of your Alberhill Project. Those concerns are: 1) Project Undergrounding; 2) Pole Alignments; 3) Easements; 4) Incorrect Depiction of Castle & Cooke layouts on the environmental exhibits; 5) the Lake Street option for VIG5/ASP2; and 6) Biological Concerns.

1) Alberhill and Ivyglen 115kV System Undergrounding

Having attended the May 11, 2016 CPUC Public Meeting, it became very apparent from the public testimony, including that of City staff, that the City of Lake Elsinore and its residents as well as those outside the City, were dissatisfied with SCE's design of the 115kV system utilizing unsightly and, in the public's opinion, unsafe overhead poles instead of underground conduits. Castle & Cooke is in support of the underground alternative through a portion of their project for approximately 5000 feet in the vicinity of Lake Street, Temescal Creek, and Temescal Canyon Road.

More specifically, Castle & Cooke is in support of SCE revising their design to include undergrounding both the Alberhill and Ivyglen 115kV circuits on Temescal Canyon Road beginning at Larson Avenue (near the west property line of Pacific Clay property); then proceeding east along Temescal Canyon Road and Temescal Creek to Lake Street; then proceeding southerly along Lake Street approximately 2000' to beyond the intersection of Lake Street and Alberhill Ridge Road as shown on Castle & Cooke's Vested Tentative Tract Map 35001. Undergrounding this portion of the 115kV lines will dramatically improve the visual impact to the entrance of the northwest portion of the City along the I-15 Freeway and along Lake Street. In addition to the aesthetics, undergrounding would greatly assist in minimizing future relocation of the 115kV overhead pole lines that will occur when construction of the expanded arterial roadways per the City's General Plan Circulation Element occurs.

2) Pole Alignments

It is our understanding that the pole alignments in the Draft EIR have not changed since the original draft alignments were created several years ago. Recent conversations with SCE staff indicated that those alignments are not final and can be slightly modified up to a year prior to the installation of the SCE pole lines. It should be noted that, as currently depicted, the power pole alignments interfere with the City's General Plan Circulation Element roadways and other rights of way. In fact, some poles are apparently planned to be located in the middle of a future roadway. Obviously, those placements are not safe, practical or ideal. Therefore, additional planning measures between the CPUC, SCE and our client must be taken in order to avoid conflicts with pole alignment. Two locations are of particular concern to Castle & Cooke. In our recent meeting with SCE representatives on May 11, 2016, SCE further clarified their intent regarding the two (2) options for the 115kV Segment VIG5 of "Utility Corridor Option" and "West of Lake Street Option," which are located just north of Nichols Road along the Lake Street Corridor. SCE stated that their primary option is the "Utility Corridor Option" which is subject to Castle & Cooke obtaining approval of a Streambed Alteration Agreement from the California Department of Fish and Wildlife and possibly other Resource Agencies. Those discussions are ongoing.

The other location is on Temescal Canyon Road at Temescal Creek which is located at the northwest corner of the Pacific Clay site. This location has two (2) SCE alignments for the 115kV lines crossing the proposed realignment of Temescal Canyon Road at the Temescal Creek in support of the City of Lake Elsinore's Temescal Creek Bridge Relocation Project. The two alignments are a result of showing the "before and after" pole line options for the roadway realignment project depending on which entity, SCE or the City of Lake Elsinore, construct their facility first. Both projects are on similar timeframes. This area of the SCE 115kV project would be ideal for the 115kV lines to be underground to avoid the extreme potential for immediate pole line conflicts resulting in unnecessary relocation of the new 115kV pole lines, and secondly, undergrounding of the pole lines in this area would significantly improve the viewshed from the I-15 freeway onto the entrance to the northern portion of the City of Lake Elsinore.

3) Easements

The Draft EIR mentions rights of way ("ROW") that the applicant (SCE) would use for the construction and operation of utility facilities. VIG5 and ASP2 are located in the midst of several development projects on land owned by Castle & Cooke. At this time, there have been no discussions as to obtaining any utility easements for the Alberhill Project. We understand that the necessary easements cannot be requested until the final pole alignments are set. This once again highlights the need for ongoing cooperation between SCE and our client.

4) Incorrect Layout on Environmental Exhibits

The Draft EIR contains errors with regard to the actual layout of Castle & Cooke property. Obviously, correct layouts are imperative in engineering appropriate pole alignments and securing proper easements. As such, it is imperative to correct those layouts as quickly as possible. Castle & Cooke will provide these layouts to the appropriate party upon notification. For instance, Figure 2.2b incorrectly depicts the location of the overhead pole lines traversing Castle & Cooke property. As shown on the attached Exhibit 1, we have noted the location of the incorrectly plotted line. The depiction of the overhead pole line design in this area needs to be corrected by SCE. As best as we can tell from Figure 2.2b. The reference to the 500kv Serrano Transmission line should be labeled either Ivyglen or Alberhill system. Additionally, Figure 4.4-1 incorrectly depicts the Castle & Cooke property where the MSHCP does not apply. As shown on the attached Exhibit 2, we have noted the correct boundary area of the entire Castle & Cooke property. Lastly, Figure 6-1 incorrectly depicts the limits of Castle & Cooke's Alberhill Ridge property. We have noted the correct boundary of the Castle & Cooke Alberhill Ridge Boundary on the additional attached Exhibit 3.

5) Lake Street Options

Section 2.3.1 of the Draft EIR indicates that there are two options with regard to the location of VIG5 lines along Lake Street. The first option is the Utility Corridor Option, and the second is the West of Lake Street Option. We are aware that these options are listed as a result of ongoing negotiations between our client and several public agencies to obtain approval of a Streambed Alteration Agreement ("SAA"). It is our understanding that SCE would prefer to utilize the Utility Corridor Option, which is dependent on finalization of the SAA. In our May 11, 2016 meeting with SCE staff, they indicated that those alignments are not final and can be slightly modified up to a year prior to the installation of the SCE pole lines. We are diligently working toward completion and approval of the SAA. We will keep you and SCE fully apprised of developments in this area. Any assistance that may be provided by the CPUC or SCE on this matter would be appreciated.

6) Biology and Jurisdictional Delineation

The Draft EIR and its appendices contain biological and jurisdictional data that is either incorrect or poorly represented. For example, the proposed impacts to Riverene/Riparian habitats (Exhibits in Appendix A2 for phase 2) do not depict any jurisdictional waters (USACE/CDFW) along Lake St., which contradicts the exhibits in Appendix A1 for Phase 2. Specifically, Maps 7 and 8 incorrectly depicts waters of the US and California along Lake Street. The United States Army Corps of Engineers (USACE) mapping (Exhibit 4) did not cite to or take into account the previously published The Planning Associates (TPA) jurisdictional delineations (Exhibit 6). The Jurisdictional Determination from the USACE for the TPA delineation is File Number: SPL-2012-0188-CLD and was administered on 12/17/2014. This determination is a public document and accurately reflects the streambed jurisdiction. The extent of the jurisdictional waters, particularly Drainage C, are inaccurate and exaggerated and encompass areas determined not to be jurisdictional under the TPA jurisdictional determination and the USACE validation.

In an email from June 25, 2013, Tonya Moore of the USACE states that the "presence of riparian vegetation typically correlates with CDFW jurisdictional limits without citation and is therefore used as 'appropriate' to assist in defining CDFW jurisdictional limits." She also notes the limits of federal waters were determined by USACE using a "desktop analysis, including a review of detailed aerial photos." It is apparent that the waters of the US and California for the USACE delineation were determined using aerial photographs and not actual surveying of the streambed on the ground. Using photographs to determine boundaries of the streambed misrepresents what is actually on the ground. The TPA jurisdictional delineation, previously provided to SCE, accurately reflects the stream characteristics. Many of the TPA lath stakes identifying state and federal jurisdictional widths were still evident in the field. The TPA jurisdictional analysis is accurate.

The EIR inaccurately states that the Lake Street corridor is not covered by the MSHCP. The Lake Street corridor actually falls under MSHCP jurisdiction, and there are corresponding "Take Permits" in place for much of the SCE project area along Lake Street.

The Least Bell's Vireo cited on Maps 7-9 of Appendix A1 for phase 2 of the EIR was actually a single male moving through the site. There is little, if any, suitable habitat for this species on the site. This presentation is inaccurate and should be clarified. The species was found outside its traditional habitat. No nesting activity of any avian species was reported by USACE.

We appreciate the time and effort that has gone into this Draft EIR. Our client and this office look forward to working together to facilitate our mutual projects in the area. Please advise us of the date(s) of any hearings or other actions. Please do not hesitate to contact me directly for assistance.

Very truly yours,

THE GIARDINELLI LAW GROUP, APC

John V. Giardinelli
Attorney at Law

JVG:AMB:dp
Exhibits:

1) Figure 2.2b
2) Figure 4.4-1
3) Figure 6.1
4) USACE Jurisdictional Determination 12/17/2014
5) TPA Executive Summary, Jurisdictional Delineation 12/29/2008 (A complete Jurisdictional Delineation Report for the Lake Street4 Project Site will be provided electronically upon request, due to its voluminous size.)

cc: (Copy of letter only sent to below recipients; Exhibits available upon written request)
Tammy Jones, Southern California Edison
Nick Sher, California Public Utility Commission
Barbara Leibold, City of Lake Elsinore
Tom Tomlinson, Castle & Cooke
Ken Crawford, KWC Engineers
Steve Miles, Attorney at Law

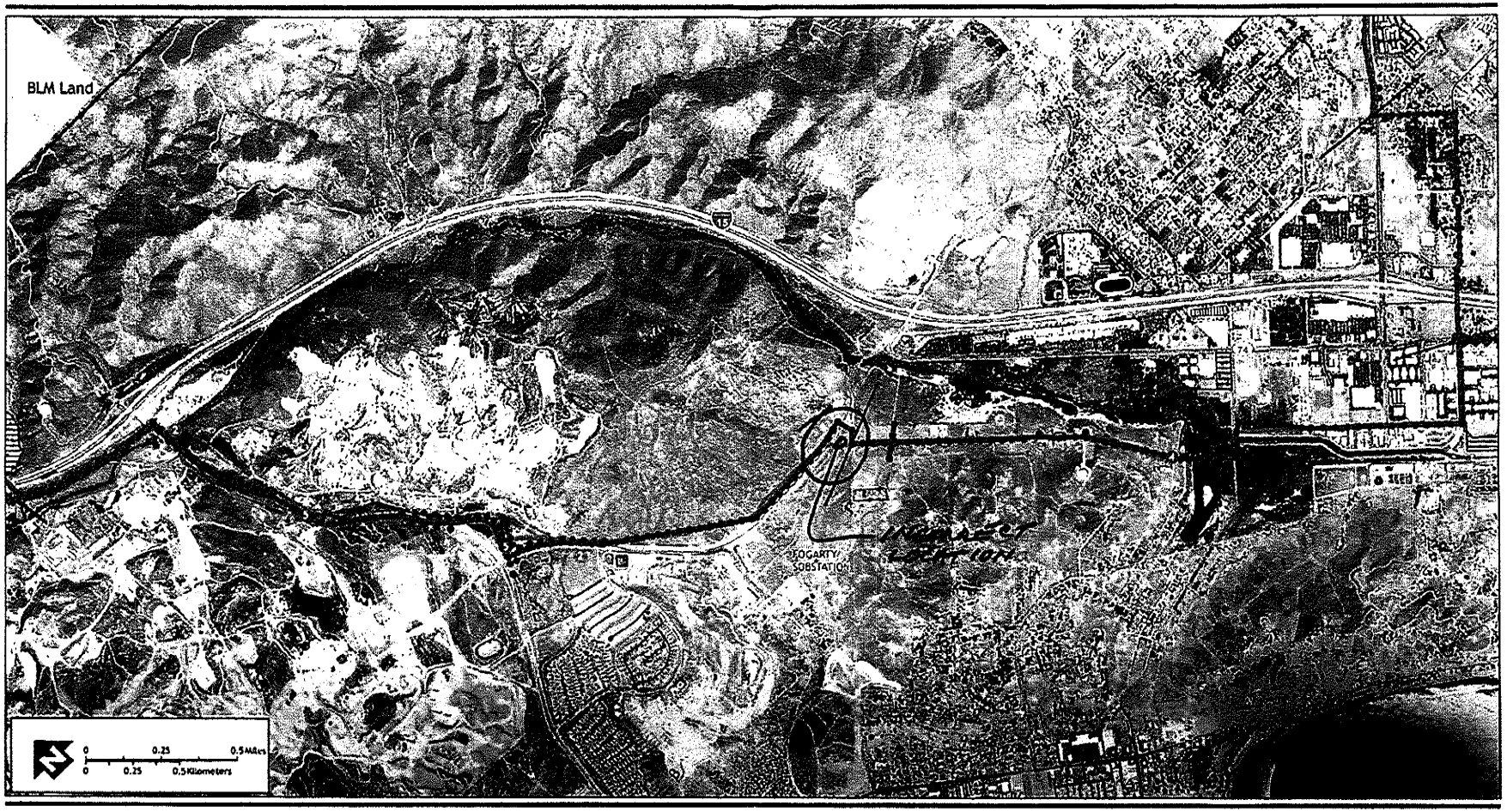

1 VIG1
2 VIG2
3 VIG3
4 VIG4
5 VIG5
6 VIG6
7 VIG7
8 VIG8

1 ASP1
2 ASP1.5
2 ASP2
3 ASP3
4 ASP4

5 ASP5
6 ASP6
7 ASP7
8 ASP8

New Poles
Poles to Remove
Staging Areas

Existing Substations
Proposed Alberhill Substation
Proposed 500-kV transmission lines
500-kV Serrano Valley Transmission Line
Segment begin / end

BLM Land
Riverside County Habitat Conservation Agency core reserve

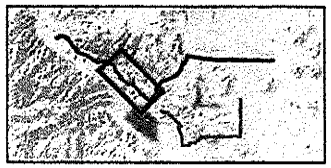

Figure 2.2b

Project Features

Alberhill and Valley–Ivyglen Projects

Riverside County, California

Ex. 1

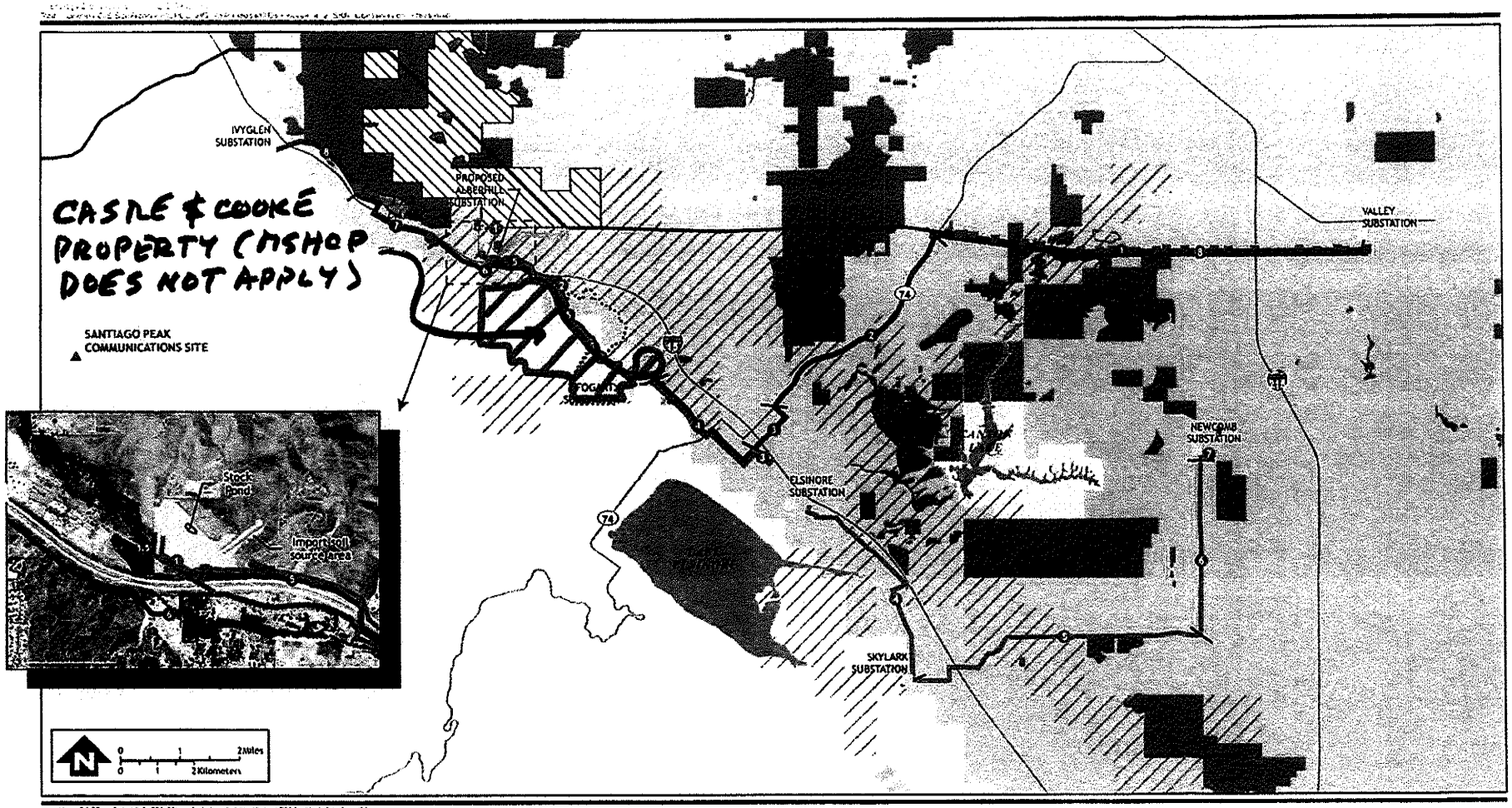

1 VIG1
2 VIG2
3 VIG3
4 VIG4
5 VIG5
6 VIG6
7 VIG7
8 VIG8

1 ASP1
1.5 ASP1.5
2 ASP2
3 ASP3
4 ASP4

5 ASP5
6 ASP6
7 ASP7
8 ASP8

Existing Substations
Proposed Alberhill Substation
Proposed 500-kV transmission lines
500-kV Serrano Valley Transmission Line
Segment begin / end

SKR occurrence / occurrences area
RCHCA core reserve
WRCRCA MSHCP Additional Reserve Land
WRCRCA MSHCP area

MSHCP sensitive soils
RCHCA SKR HCP area
High-quality habitat identified in RCHCA SKR HCP
Castle & Cooke Property (MSHCP does not apply)

Figure 4.4-1

Stephens' Kangaroo Rat Conservations Areas and Occurences

Alberhill and Valley–Ivyglen Projects

Riverside County, California

Ex. 2

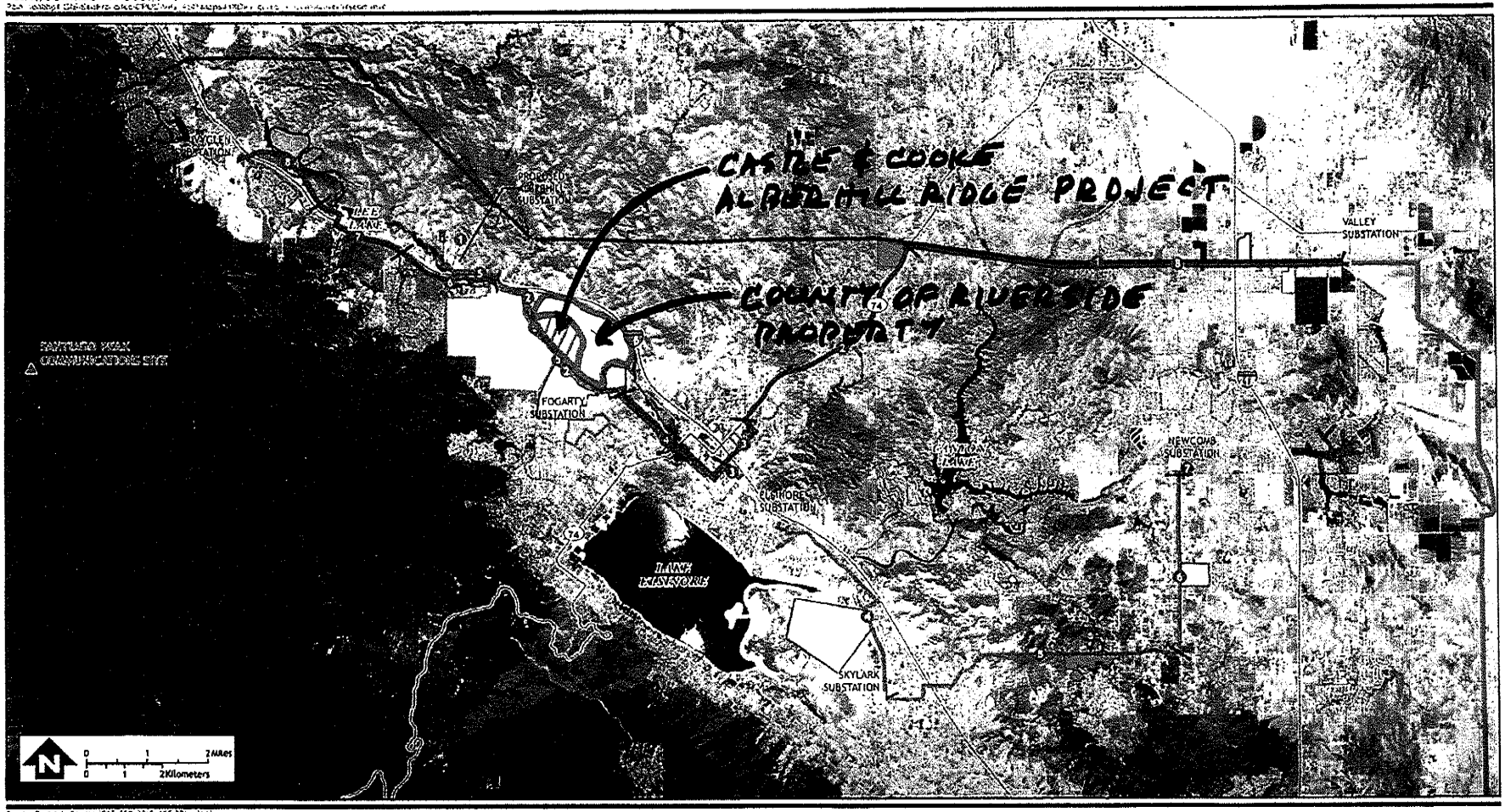

1 VIG1
2 VIG2
3 VIG3
4 VIG4
5 VIG5
6 VIG6
7 VIG7
8 VIG8

1 ASP1
1.5 ASP1.5
2 ASP2
3 ASP3
4 ASP4

5 ASP5
6 ASP6
7 ASP7
8 ASP8

Existing Substations
Proposed Alberhill Substation
Proposed 500-kV transmission lines
500-kV Serrano Valley Transmission Line
Segment begin / end

Cumulative Projects
Alberhill Ranch Residential Development
Alberhill Ridge
Alberhill Villages Specific Plan
Colinas de Oro
Hidden Hills
Motte Town Center
Oak Creek Canyon
Summerly
Talavera
Terracina
Terramor (formerly Toscana)
Underwood
Walmart Lake Elsinore
Valley South Subtransmission Line

Figure 6-1

Cumulative Projects

Alberhill and Valley–Ivyglen Projects

Riverside County, California

Ex. 3

DEPARTMENT OF THE ARMY
LOS ANGELES DISTRICT, U.S. ARMY CORPS OF ENGINEERS
REGULATORY DIVISION, RIVERSIDE FIELD OFFICE
1451 RESEARCH PARK DRIVE, SUITE 100
RIVERSIDE, CALIFORNIA 92507

December 17, 2014

Tom Tomlinson
Castle & Cooke Lake Elsinore West, Inc.
6455 Alberhill Ranch Road
Lake Elsinore, California 92530

SUBJECT: Approved Jurisdictional Determination regarding geographic jurisdiction

Dear Mr. Tomlinson:

I am responding to your request (File No. SPL-2012-00188-CLD) dated January 31, 2014, and submitted by The Planning Associates on your behalf, for an approved Department of the Army jurisdictional determination (JD) for the Lake Street Expansion Project site, located within the city of Lake Elsinore, Riverside County, California.

The Corps' evaluation process for determining whether a Department of the Army permit is needed involves two tests. If both tests are met, a permit would likely be required. The first test determines whether the proposed project is located within the Corps' geographic jurisdiction (i.e., it is within a water of the United States). The second test determines whether the proposed project is a regulated activity under Section 10 of the Rivers and Harbors Act or Section 404 of the Clean Water Act. This evaluation pertains only to geographic jurisdiction.

Based on available information, I have determined there are waters of the United States on the project site, as well as non-jurisdictional aquatic resources, in the locations depicted on the AMEC/Edison Boundary 2013 map provided by Castle & Cooke. The basis for our determination can be found in the enclosed Approved JD form.

This letter includes an approved jurisdictional determination for the Lake Street Expansion Project site. If you wish to submit new information regarding this jurisdictional determination, please do so within 60 days. We will consider any new information so submitted and respond within 60 days by either revising the prior determination, if appropriate, or reissuing the prior determination. If you object to this or any revised or reissued jurisdictional determination, you may request an administrative appeal under Corps regulations at 33 CFR Part 331. Enclosed you will find a Notification of Appeal Process (NAP) fact sheet and Request for Appeal (RFA) form. If you wish to appeal this decision, you must submit a completed RFA form within 60 days of the date on the NAP to the Corps South Pacific Division Office at the following address:

Ex. 4

Tom Cavanaugh
Administrative Appeal Review Officer
U.S. Army Corps of Engineers
South Pacific Division, CESPD-PDS-O, 2042B
1455 Market Street
San Francisco, California 94103-1399

In order for an RFA to be accepted by the Corps, the Corps must determine that it is complete, that it meets the criteria for appeal under 33 C.F.R. Part 331.5 (see below), and that it has been received by the Division Office by February 9, 2015.

This determination has been conducted to identify the extent of the Corps' Clean Water Act jurisdiction on the particular project site identified in your request, and is valid for five years from the date of this letter, unless new information warrants revision of the determination before the expiration date. This determination may not be valid for the wetland conservation provisions of the Food Security Act of 1985. If you or your tenant are U.S. Department of Agriculture (USDA) program participants, or anticipate participation in USDA programs, you should request a certified wetland determination from the local office of the Natural Resources Conservation Service prior to starting work.

Thank you for participating in the regulatory program. If you have any questions, please contact me at 951-276-6624 x260 or via e-mail at Crystel.L.Doyle@usace.army.mil.

As a courtesy, copies of this letter are provided to the following interested parties via electronic mail: Mr. Hardy Strozier, The Planning Associates; Mark Adelson, Santa Ana Regional Water Quality Control Board; and Rob Leidy, U.S. Environmental Protection Agency, Region IX.

Sincerely,

BRADFORD.THERESE.O'ROURKE.1368382015

Digitally signed by BRADFORD.THERESE.O'ROURKE.1368382015
DN: c=US, o=U.S. Government, ou=DoD, ou=PKI, ou=USA, cn=BRADFORD.THERESE.O'ROURKE.1368382015
Date: 2014.12.17 13:47:33 -08'00'

Therese O. Bradford
Chief, South Coast Branch
Regulatory Division

Enclosure(s)

NOTIFICATION OF ADMINISTRATIVE APPEAL OPTIONS AND PROCESS AND REQUEST FOR APPEAL

Applicant: Tom Tomlinson, Castle & Cooke Lake Elsinore West, Inc.	File Number: SPL-2012-00188-CLD	Date: 12/11/2014
Attached is:		See Section below
	INITIAL PROFFERED PERMIT (Standard Permit or Letter of permission)	A
	PROFFERED PERMIT (Standard Permit or Letter of permission)	B
	PERMIT DENIAL	C
X	APPROVED JURISDICTIONAL DETERMINATION	D
	PRELIMINARY JURISDICTIONAL DETERMINATION	E

SECTION I - The following identifies your rights and options regarding an administrative appeal of the above decision. Additional information may be found at http://www.usace.army.mil/cecw/pages/reg_materials.aspx or Corps regulations at 33 CFR Part 331.

A: INITIAL PROFFERED PERMIT: You may accept or object to the permit.

- ACCEPT: If you received a Standard Permit, you may sign the permit document and return it to the district engineer for final authorization. If you received a Letter of Permission (LOP), you may accept the LOP and your work is authorized. Your signature on the Standard Permit or acceptance of the LOP means that you accept the permit in its entirety, and waive all rights to appeal the permit, including its terms and conditions, and approved jurisdictional determinations associated with the permit.

- OBJECT: If you object to the permit (Standard or LOP) because of certain terms and conditions therein, you may request that the permit be modified accordingly. You must complete Section II of this form and return the form to the district engineer. Your objections must be received by the district engineer within 60 days of the date of this notice, or you will forfeit your right to appeal the permit in the future. Upon receipt of your letter, the district engineer will evaluate your objections and may: (a) modify the permit to address all of your concerns, (b) modify the permit to address some of your objections, or (c) not modify the permit having determined that the permit should be issued as previously written. After evaluating your objections, the district engineer will send you a proffered permit for your reconsideration, as indicated in Section B below.

B: PROFFERED PERMIT: You may accept or appeal the permit

- ACCEPT: If you received a Standard Permit, you may sign the permit document and return it to the district engineer for final authorization. If you received a Letter of Permission (LOP), you may accept the LOP and your work is authorized. Your signature on the Standard Permit or acceptance of the LOP means that you accept the permit in its entirety, and waive all rights to appeal the permit, including its terms and conditions, and approved jurisdictional determinations associated with the permit.

- APPEAL: If you choose to decline the proffered permit (Standard or LOP) because of certain terms and conditions therein, you may appeal the declined permit under the Corps of Engineers Administrative Appeal Process by completing Section II of this form and sending the form to the division engineer. This form must be received by the division engineer within 60 days of the date of this notice.

C: PERMIT DENIAL: You may appeal the denial of a permit under the Corps of Engineers Administrative Appeal Process by completing Section II of this form and sending the form to the division engineer. This form must be received by the division engineer within 60 days of the date of this notice.

D: APPROVED JURISDICTIONAL DETERMINATION: You may accept or appeal the approved JD or provide new information.

- ACCEPT: You do not need to notify the Corps to accept an approved JD. Failure to notify the Corps within 60 days of the date of this notice means that you accept the approved JD in its entirety, and waive all rights to appeal the approved JD.

- APPEAL: If you disagree with the approved JD, you may appeal the approved JD under the Corps of Engineers Administrative Appeal Process by completing Section II of this form and sending the form to the division engineer. This form must be received by the division engineer within 60 days of the date of this notice.

E: PRELIMINARY JURISDICTIONAL DETERMINATION: You do not need to respond to the Corps regarding the preliminary JD. The Preliminary JD is not appealable. If you wish, you may request an approved JD (which may be appealed), by contacting the Corps district for further instruction. Also, you may provide new information for further consideration by the Corps to reevaluate the JD.

SECTION II - REQUEST FOR APPEAL or OBJECTIONS TO AN INITIAL PROFFERED PERMIT

REASONS FOR APPEAL OR OBJECTIONS: (Describe your reasons for appealing the decision or your objections to an initial proffered permit in clear concise statements. You may attach additional information to this form to clarify where your reasons or objections are addressed in the administrative record.)

ADDITIONAL INFORMATION: The appeal is limited to a review of the administrative record, the Corps memorandum for the record of the appeal conference or meeting, and any supplemental information that the review officer has determined is needed to clarify the administrative record. Neither the appellant nor the Corps may add new information or analyses to the record. However, you may provide additional information to clarify the location of information that is already in the administrative record.

POINT OF CONTACT FOR QUESTIONS OR INFORMATION:

If you have questions regarding this decision and/or the appeal process you may contact:	If you only have questions regarding the appeal process you may also contact: Thomas J. Cavanaugh Administrative Appeal Review Officer, U.S. Army Corps of Engineers South Pacific Division 1455 Market Street, 2052B San Francisco, California 94103-1399 Phone: (415) 503-6574 Fax: (415) 503-6646 Email: thomas.j.cavanaugh@usace.army.mil

RIGHT OF ENTRY: Your signature below grants the right of entry to Corps of Engineers personnel, and any government consultants, to conduct investigations of the project site during the course of the appeal process. You will be provided a 15-day notice of any site investigation, and will have the opportunity to participate in all site investigations.

_____ Signature of appellant or agent.	Date:	Telephone number:

Administrative Appeal Process for Approved Jurisdictional Determinations

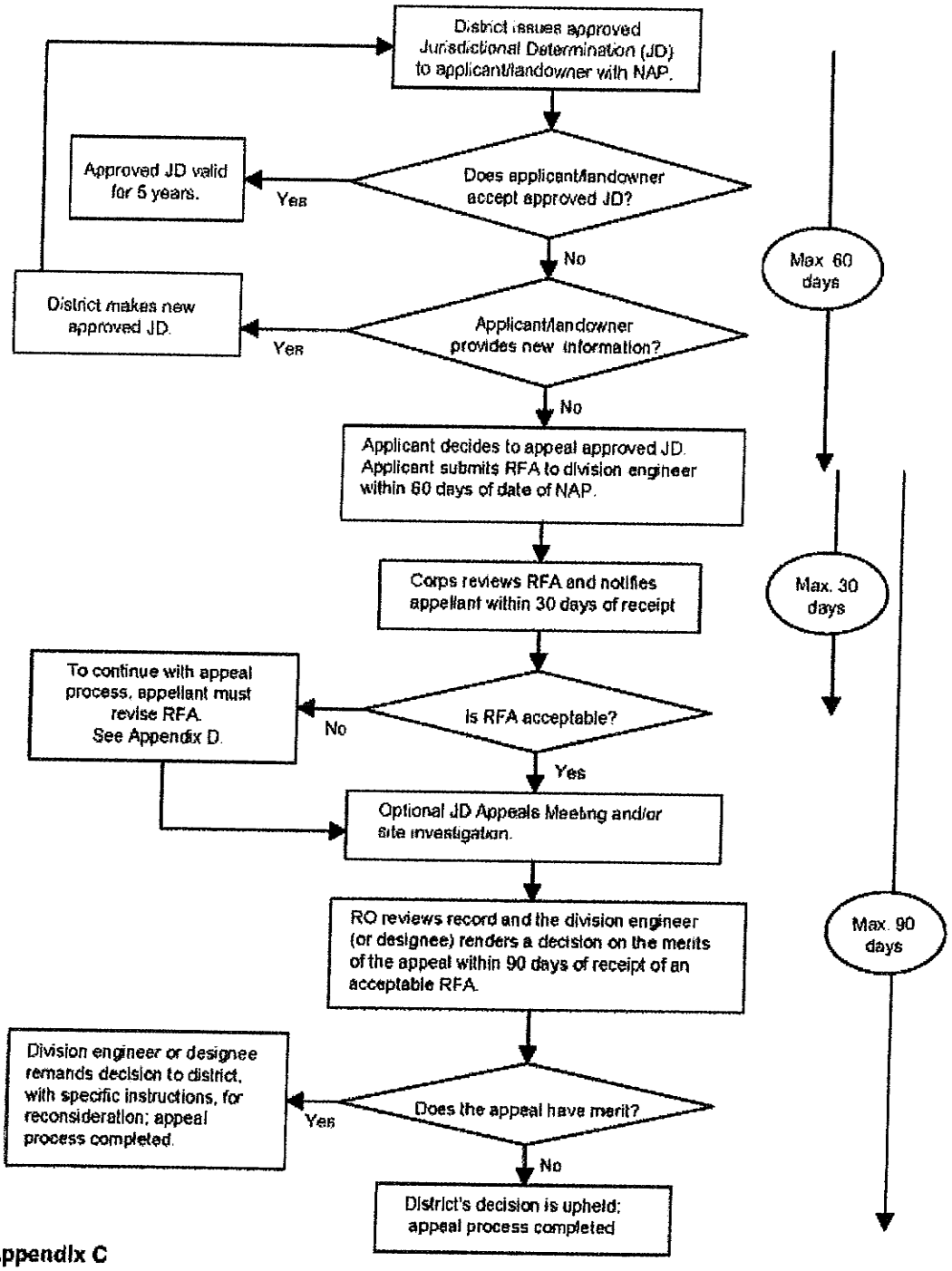

Appendix C

§ 331.5 Criteria.

(a) *Criteria for appeal*—(1) *Submission of RFA.* The appellant must submit a completed RFA (as defined at §331.2) to the appropriate division office in order to appeal an approved JD, a permit denial, or a declined permit. An individual permit that has been signed by the applicant, and subsequently unilaterally modified by the district engineer pursuant to 33 CFR 325.7, may be appealed under this process, provided that the applicant has not started work in waters of the United States authorized by the permit. The RFA must be received by the division engineer within 60 days of the date of the NAP.

(2) *Reasons for appeal.* The reason(s) for requesting an appeal of an approved JD, a permit denial, or a declined permit must be specifically stated in the RFA and must be more than a simple request for appeal because the affected party did not like the approved JD, permit decision, or the permit conditions. Examples of reasons for appeals include, but are not limited to, the following: A procedural error; an incorrect application of law, regulation or officially promulgated policy; omission of material fact; incorrect application of the current regulatory criteria and associated guidance for identifying and delineating wetlands; incorrect application of the Section 404(b)(1) Guidelines (see 40 CFR Part 230); or use of incorrect data. The reasons for appealing a permit denial or a declined permit may include jurisdiction issues, whether or not a previous approved JD was appealed.

(b) *Actions not appealable.* An action or decision is not subject to an administrative appeal under this part if it falls into one or more of the following categories:

(1) An individual permit decision (including a letter of permission or a standard permit with special conditions), where the permit has been accepted and signed by the permittee. By signing the permit, the applicant waives all rights to appeal the terms and conditions of the permit, unless the authorized work has not started in waters of the United States and that issued permit is subsequently modified by the district engineer pursuant to 33 CFR 325.7;

(2) Any site-specific matter that has been the subject of a final decision of the Federal courts;

(3) A final Corps decision that has resulted from additional analysis and evaluation, as directed by a final appeal decision;

(4) A permit denial without prejudice or a declined permit, where the controlling factor cannot be changed by the Corps decision maker (e.g., the requirements of a binding statute, regulation, state Section 401 water quality certification, state coastal zone management disapproval, etc. (See 33 CFR 320.4(j));

(5) A permit denial case where the applicant has subsequently modified the proposed project, because this would constitute an amended application that would require a new public interest review, rather than an appeal of the existing record and decision;

(6) Any request for the appeal of an approved JD, a denied permit, or a declined permit where the RFA has not been received by the division engineer within 60 days of the date of the NAP;

(7) A previously approved JD that has been superseded by another approved JD based on new information or data submitted by the applicant. The new approved JD is an appealable action;

(8) An approved JD associated with an individual permit where the permit has been accepted and signed by the permittee;

(9) A preliminary JD; or

(10) A JD associated with unauthorized activities except as provided in §331.11.

Figure 2. Lake Street Expansion Project
Corps File No. SPL-2012-00188-CLD

Site Location Map on USGS, Alberhill Quad

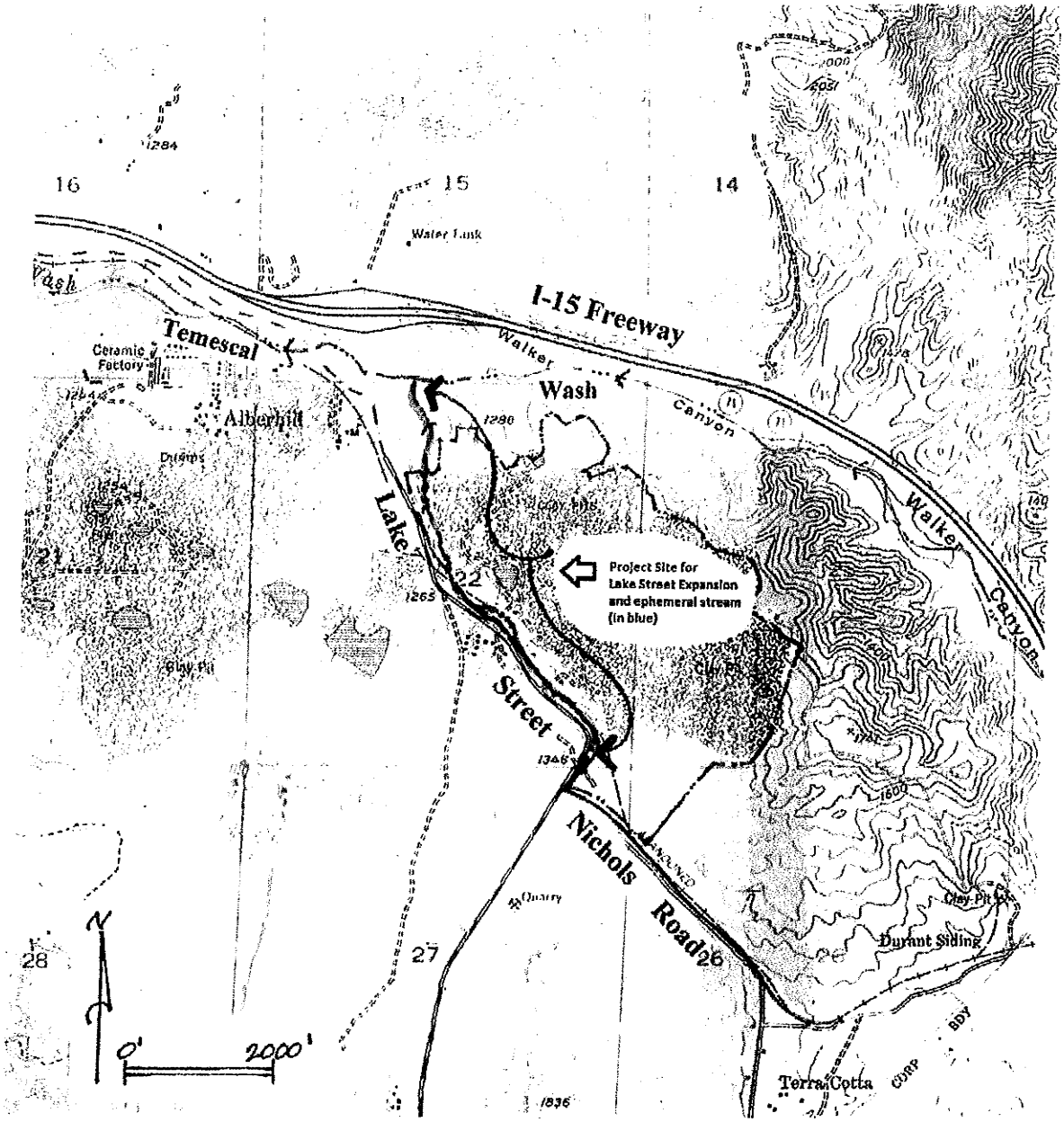

Project Site Location Portion of Section 22, Township 5 South, Range 5 West on the Alberhill, CA, 7.5' United States Geological Surveys (USGS) Quadrangle

APPROVED JURISDICTIONAL DETERMINATION FORM
U.S. Army Corps of Engineers

This form should be completed by following the instructions provided in Section IV of the JD Form Instructional Guidebook.

SECTION I: BACKGROUND INFORMATION

A. REPORT COMPLETION DATE FOR APPROVED JURISDICTIONAL DETERMINATION (JD): 10/30/2014

B. DISTRICT OFFICE, FILE NAME, AND NUMBER: Los Angeles District, Lake Street Expansion Project, SPL-2012-00188-CLD

C. PROJECT LOCATION AND BACKGROUND INFORMATION: The Lake Street Expansion Project is located north of the proposed Nichols Road intersection at Lake Street, south of the I-15 freeway and east and adjacent to Lake Street, beginning just south of Temescal Canyon Wash. The Project is within the City of Lake Elsinore, Riverside County, California (AMEC/Edison Boundary 2013).

The project site contains approximately 6,480 linear feet of streambed (relevant reach) which flows in a northwest direction into Temescal Wash. The streambed contains two ephemeral segments (ephemeral segment 1 and ephemeral segment 2) comprising approximately 90% of the total streambed, and one perennial segment that comprises approximately 10% of the streambed and is located in between the two ephemeral segments. Google Earth Pro 2006, 2009, and 2014.

Ephemeral segment 1 begins immediately south of the I-15 freeway and is approximately 4,670 feet long. The perennial segment of the stream begins where ephemeral segment 1 ends and is approximately 650 feet long. Ephemeral segment 2 then begins and is approximately 1,160 feet in length.

The project site also contains five detention basins. After reviewing information submitted by the applicant, a field visit on March 17, 2014, and review of aerial photos, it was concluded the detention basins were excavated wholly in and drain only uplands between August of 2006, and June of 2009, and are not jurisdictional features. *See further explanation at IIB.2. and IIIF.

State: California County/parish/borough: Riverside City: Lake Elsinore
Center coordinates of site (lat/long in degree decimal format): Lat. N 33° 43' 12.73'°, Long. W -117° 23' 22.51'.
Universal Transverse Mercator:
Name of nearest water body: Temescal Wash
Name of nearest Traditional Navigable Water (TNW) into which the aquatic resource flows: Pacific Ocean
Name of watershed or Hydrologic Unit Code (HUC): Santa Ana Watershed HUC: 18070203
☒ Check if map/diagram of review area and/or potential jurisdictional areas is/are available upon request.
☐ Check if other sites (e.g., offsite mitigation sites, disposal sites, etc…) are associated with this action and are recorded on a different JD form.

D. REVIEW PERFORMED FOR SITE EVALUATION (CHECK ALL THAT APPLY):
☒ Office (Desk) Determination. Date: April-October 2014
☒ Field Determination. Date(s): March 17, 2014

SECTION II: SUMMARY OF FINDINGS

A. RHA SECTION 10 DETERMINATION OF JURISDICTION.

There **Are no** "*navigable waters of the U.S.*" within Rivers and Harbors Act (RHA) jurisdiction (as defined by 33 CFR part 329) in the review area. [*Required*]
☐ Waters subject to the ebb and flow of the tide.
☐ Waters are presently used, or have been used in the past, or may be susceptible for use to transport interstate or foreign commerce. Explain:

B. CWA SECTION 404 DETERMINATION OF JURISDICTION.

There **Are** "*waters of the U.S.*" within Clean Water Act (CWA) jurisdiction (as defined by 33 CFR part 328) in the review area. [*Required*]

1. Waters of the U.S.
   a. Indicate presence of waters of U.S. in review area (check all that apply): [1]
      ☐ TNWs, including territorial seas
      ☐ Wetlands adjacent to TNWs
      ☒ Relatively permanent waters[2] (RPWs) that flow directly or indirectly into TNWs
      ☒ Non-RPWs that flow directly or indirectly into TNWs
      ☐ Wetlands directly abutting RPWs that flow directly or indirectly into TNWs
      ☐ Wetlands adjacent to but not directly abutting RPWs that flow directly or indirectly into TNWs
      ☐ Wetlands adjacent to non-RPWs that flow directly or indirectly into TNWs
      ☐ Impoundments of jurisdictional waters

[1] Boxes checked below shall be supported by completing the appropriate sections in Section III below.
[2] For purposes of this form, an RPW is defined as a tributary that is not a TNW and that typically flows year-round or has continuous flow at least "seasonally" (e.g., typically 3 months).

☒ Isolated (interstate or intrastate) waters, including isolated wetlands

b. **Identify (estimate) size of waters of the U.S. in the review area:**
Non-wetland waters: 6,480 linear feet: 2-35 width (ft) and/or 1.31 acres.
Wetlands: None. acres.

c. **Limits (boundaries) of jurisdiction** based on: **Established by OHWM.**
Elevation of established OHWM (if known):

2. **Non-regulated waters/wetlands (check if applicable):**[3]

☒ Potentially jurisdictional waters and/or wetlands were assessed within the review area and were determined to not be jurisdictional. Explain: The project site contains five detention basins, located east of the stream feature, at the southern end of the project site. Per a review of aerial photography, the basins were constructed in upland areas between 2006 and 2009, and are associated with water quality management for the adjacent clay mine. Per 33 C.F.R. § 328.3, these potentially jurisdictional wetland waters are artificial ponds excavated wholly and drain only uplands for the purpose of collecting sediment from the mining site (as required per storm water management plan). Consequently, these features are not waters of the U.S.

SECTION III: CWA ANALYSIS

A. TNWs AND WETLANDS ADJACENT TO TNWs

The agencies will assert jurisdiction over TNWs and wetlands adjacent to TNWs. If the aquatic resource is a TNW, complete Section III.A.1 and Section III.D.1. only; if the aquatic resource is a wetland adjacent to a TNW, complete Sections III.A.1 and 2 and Section III.D.1.; otherwise, see Section III.B below.

1. TNW
Identify TNW: .

Summarize rationale supporting determination: .

2. **Wetland adjacent to TNW**
Summarize rationale supporting conclusion that wetland is "adjacent": .

B. CHARACTERISTICS OF TRIBUTARY (THAT IS NOT A TNW) AND ITS ADJACENT WETLANDS (IF ANY):

This section summarizes information regarding characteristics of the tributary and its adjacent wetlands, if any, and it helps determine whether or not the standards for jurisdiction established under *Rapanos* have been met.

The agencies will assert jurisdiction over non-navigable tributaries of TNWs where the tributaries are "relatively permanent waters" (RPWs), i.e. tributaries that typically flow year-round or have continuous flow at least seasonally (e.g., typically 3 months). A wetland that directly abuts an RPW is also jurisdictional. If the aquatic resource is not a TNW, but has year-round (perennial) flow, skip to Section III.D.2. If the aquatic resource is a wetland directly abutting a tributary with perennial flow, skip to Section III.D.4.

A wetland that is adjacent to but that does not directly abut an RPW requires a significant nexus evaluation. Corps districts and EPA regions will include in the record any available information that documents the existence of a significant nexus between a relatively permanent tributary that is not perennial (and its adjacent wetlands if any) and a traditional navigable water, even though a significant nexus finding is not required as a matter of law.

If the waterbody[4] is not an RPW, or a wetland directly abutting an RPW, a JD will require additional data to determine if the waterbody has a significant nexus with a TNW. If the tributary has adjacent wetlands, the significant nexus evaluation must consider the tributary in combination with all of its adjacent wetlands. This significant nexus evaluation that combines, for analytical purposes, the tributary and all of its adjacent wetlands is used whether the review area identified in the JD request is the tributary, or its adjacent wetlands, or both. If the JD covers a tributary with adjacent wetlands, complete Section III.B.1 for the tributary, Section III.B.2 for any onsite wetlands, and Section III.B.3 for all wetlands adjacent to that tributary, both onsite and offsite. The determination whether a significant nexus exists is determined in Section III.C below.

1. **Characteristics of non-TNWs that flow directly or indirectly into TNW**

(i) **General Area Conditions:**

---

[3] Supporting documentation is presented in Section III.F.
[4] Note that the Instructional Guidebook contains additional information regarding swales, ditches, washes, and erosional features generally and in the arid West.

Watershed size: 900 **acres**
Drainage area: 900 **acres**
Average annual rainfall: 11.5 inches
Average annual snowfall: 0 inches

(ii) **Physical Characteristics:**

(a) Relationship with TNW:

☐ Tributary flows directly into TNW.
☒ Tributary flows through **3** tributaries before entering TNW.

Project waters are **30 (or more)** river miles from TNW.
Project waters are **1 (or less)** river miles from RPW.
Project waters are **30 (or more)** aerial (straight) miles from TNW.
Project waters are **1 (or less)** aerial (straight) miles from RPW.
Project waters cross or serve as state boundaries. Explain: .

Identify flow route to TNW[5]. **Through Temescal Wash to Prado Basin to Santa Ana River to tidal area of Santa Ana River (Pacific Ocean). Google Earth Pro 2006, 2009, and 2014.**

Tributary stream order, if known: 2nd Order.

(b) General Tributary Characteristics (check all that apply):

Tributary is: ☒ Natural
☐ Artificial (man-made). Explain: .
☐ Manipulated (man-altered). Explain:

Tributary properties with respect to top of bank (estimate):
Average width: 2-35 feet
Average depth: **1-5**feet
Average side slopes: **varies.**

Primary tributary substrate composition (check all that apply):

☒ Silts	☒ Sands	☐ Concrete
☐ Cobbles	☐ Gravel	☐ Muck
☐ Bedrock	☒ Vegetation. Type/% cover: **varies from upper to lower portions**	
☐ Other. Explain: .		

Tributary condition/stability [e.g., highly eroding, sloughing banks]. Explain: Ephemeral streambed contains erosional features, sedimentation, and the depostion of debris and detritus.
Presence of run/riffle/pool complexes. Explain: perennial portion - small pools.
Tributary geometry: **Meandering**
Tributary gradient (approximate average slope): 1 - 2 %

(c) Flow:

Tributary provides for: **Ephemeral and Perennial flows**
Estimate average number of flow events in review area/year: **2-5**
Describe flow regime: **relevant reach of streambed contains two ephemeral segments that make up approximately 90% of the total streambed and one perennial segment that constitutes approximately 10% of the streambed and is located in between the two ephemeral segments.**
Other information on duration and volume: **perennial segment is fed by natural springs and local runoff; ephemeral segments are fed by local runoff during and immediately after storm events.**

Surface flow is: **Discrete and confined** Characteristics: **local runoff and flow from local springs create perennial flow regime in 10 % of the stream, while the rest remains ephemeral, becoming confluent with Temescal Wash during storm events.**

Subsurface flow: **Unknown**. Explain findings:
☐ Dye (or other) test performed: .

Tributary has (check all that apply):
☒ Bed and banks
☒ OHWM[6] (check all indicators that apply):

[5] Flow route can be described by identifying, e.g., tributary a, which flows through the review area, to flow into tributary b, which then flows into TNW.

☒ clear, natural line impressed on the bank
☒ changes in the character of soil
☒ shelving
☒ vegetation matted down, bent, or absent
☒ leaf litter disturbed or washed away
☒ sediment deposition
☒ water staining
☐ other (list):

☒ the presence of litter and debris
☒ destruction of terrestrial vegetation
☐ the presence of wrack line
☒ sediment sorting
☒ scour
☐ multiple observed or predicted flow events
☒ abrupt change in plant community

☐ Discontinuous OHWM.[7] Explain:

If factors other than the OHWM were used to determine lateral extent of CWA jurisdiction (check all that apply):

☒ High Tide Line indicated by:
- ☐ oil or scum line along shore objects
- ☐ fine shell or debris deposits (foreshore)
- ☐ physical markings/characteristics
- ☐ tidal gauges
- ☐ other (list):

☒ Mean High Water Mark indicated by:
- ☐ survey to available datum;
- ☐ physical markings;
- ☐ vegetation lines/changes in vegetation types.

(iii) Chemical Characteristics:

Characterize tributary (e.g., water color is clear, discolored, oily film; water quality; general watershed characteristics, etc.).

Explain: water color is relatively clear.in perennial portion of stream. No water was present in ephemeral portions of the channel.

Identify specific pollutants, if known: Unknown. Temescal wash is 303d listed for about a 7 km segment where it flows through the City of Corona and into Prado, although specific information on pollutants is unknown.

(iv) Biological Characteristics. Channel supports (check all that apply):

☒ Riparian corridor. Characteristics (type, average width):10-20.
☐ Wetland fringe. Characteristics: .
☒ Habitat for:
- ☐ Federally Listed species. Explain findings: .
- ☒ Fish/spawn areas. Explain findings: perennial segment could support fish.
- ☐ Other environmentally-sensitive species. Explain findings:
- ☒ Aquatic/wildlife diversity. Explain findings: The ephemeral segments of the relevant reach are characterized by upland vegetation and non-native species (i.e. eucalyptus) scattered along the stream course, present in some places and not in others. The perennial portion of the relavent reach is characterized by the scattering of riperian vegetation (i.e. cattails and willow species). The vegetation within this relevant reach serves as habitat for common wildlife species.

2. Characteristics of wetlands adjacent to non-TNW that flow directly or indirectly into TNW

(i) Physical Characteristics:

(a) General Wetland Characteristics:

Properties:

Wetland size: acres

Wetland type. Explain: .

Wetland quality. Explain: .

Project wetlands cross or serve as state boundaries. Explain: .

(b) General Flow Relationship with Non-TNW:

Flow is: Pick List. Explain: .

Surface flow is: Pick List

Characteristics: .

Subsurface flow: Pick List. Explain findings: .

☐ Dye (or other) test performed: .

(c) Wetland Adjacency Determination with Non-TNW:

☐ Directly abutting
☐ Not directly abutting
- ☐ Discrete wetland hydrologic connection. Explain: .
- ☐ Ecological connection. Explain: .
- ☐ Separated by berm/barrier. Explain: .

---

[6]A natural or man-made discontinuity in the OHWM does not necessarily sever jurisdiction (e.g., where the stream temporarily flows underground, or where the OHWM has been removed by development or agricultural practices). Where there is a break in the OHWM that is unrelated to the waterbody's flow regime (e.g., flow over a rock outcrop or through a culvert), the agencies will look for indicators of flow above and below the break.
[7]Ibid.

(d) Proximity (Relationship) to TNW
Project wetlands are **Pick List** river miles from TNW.
Project waters are **Pick List** aerial (straight) miles from TNW.
Flow is from: **Pick List.**
Estimate approximate location of wetland as within the **Pick List** floodplain.

(ii) Chemical Characteristics:
Characterize wetland system (e.g., water color is clear, brown, oil film on surface; water quality; general watershed characteristics; etc.). Explain: .
Identify specific pollutants, if known: .

(iii) Biological Characteristics. Wetland supports (check all that apply):
- ☐ Riparian buffer. Characteristics (type, average width): .
- ☐ Vegetation type/percent cover. Explain: .
- ☐ Habitat for:
  - ☐ Federally Listed species. Explain findings: .
  - ☐ Fish/spawn areas. Explain findings: .
  - ☐ Other environmentally-sensitive species. Explain findings: .
  - ☐ Aquatic/wildlife diversity. Explain findings: .

3. **Characteristics of all wetlands adjacent to the tributary (if any)**
All wetland(s) being considered in the cumulative analysis: **Pick List**
Approximately ( ) acres in total are being considered in the cumulative analysis.

For each wetland, specify the following:

Directly abuts? (Y/N)	Size (in acres)	Directly abuts? (Y/N)	Size (in acres)

Summarize overall biological, chemical and physical functions being performed: .

C. SIGNIFICANT NEXUS DETERMINATION

A significant nexus analysis will assess the flow characteristics and functions of the tributary itself and the functions performed by any wetlands adjacent to the tributary to determine if they significantly affect the chemical, physical, and biological integrity of a TNW. For each of the following situations, a significant nexus exists if the tributary, in combination with all of its adjacent wetlands, has more than a speculative or insubstantial effect on the chemical, physical and/or biological integrity of a TNW. Considerations when evaluating significant nexus include, but are not limited to the volume, duration, and frequency of the flow of water in the tributary and its proximity to a TNW, and the functions performed by the tributary and all its adjacent wetlands. It is not appropriate to determine significant nexus based solely on any specific threshold of distance (e.g. between a tributary and its adjacent wetland or between a tributary and the TNW). Similarly, the fact an adjacent wetland lies within or outside of a floodplain is not solely determinative of significant nexus.

Draw connections between the features documented and the effects on the TNW, as identified in the *Rapanos* Guidance and discussed in the Instructional Guidebook. Factors to consider include, for example:
- Does the tributary, in combination with its adjacent wetlands (if any), have the capacity to carry pollutants or flood waters to TNWs, or to reduce the amount of pollutants or flood waters reaching a TNW?
- Does the tributary, in combination with its adjacent wetlands (if any), provide habitat and lifecycle support functions for fish and other species, such as feeding, nesting, spawning, or rearing young for species that are present in the TNW?
- Does the tributary, in combination with its adjacent wetlands (if any), have the capacity to transfer nutrients and organic carbon that support downstream foodwebs?
- Does the tributary, in combination with its adjacent wetlands (if any), have other relationships to the physical, chemical, or biological integrity of the TNW?

Note: the above list of considerations is not inclusive and other functions observed or known to occur should be documented below:

1. **Significant nexus findings for non-RPW that has no adjacent wetlands and flows directly or indirectly into TNWs.** Explain findings of presence or absence of significant nexus below, based on the tributary itself, then go to Section III.D:

Physical Characteristics: The relevant reach of the unnamed tributary (approximately 6,480 feet), connects and drains directly into Temescal Wash. The majority of this drainage is characterized by upland vegetation and non-native species (e.g. eucalyptus)

scattered along the stream course), with the exception of the perennial segment of the relevant reach, which is characterized by the scattering of riperian vegetation (e.g. cattails and willow species).

Chemical Characteristics: The flow in the relevant reach during and after storm and flood events has the potential to provide active nutrient (and pollutant) transport and facilitate aeration and oxidative/reductive processes in the water column and creek sediment. These functions reduce the amount of pollutants reaching a TNW (Temescal Wash to Prado Basin/Santa Ana River to the Pacific Ocean). The tributary also has the capacity to transfer nutrients and organic carbon that support downstream foodwebs, as the drainage is vegetated by upland, riparian, and wetland species. Water was present in the perennial portion of the relevant reach and was relatively clear in color. No water was present in the ephemeral segments of the relevant reach at the time of the jurisdictional delineation to evaluate water characteristics in those segments.

Biological Characteristics: The perennial segment of the relevant reach can support fish (e.g. chub and dace), amphibians and other aquatic resources. During storm flow and flood events the ephemeral segments provide connectivity for these species to the downstream Temescal Wash. The perennial and ephemeral segments also provide habitat and connectivity to downstream waters for wildlife (e.g. avian and reptilian/amphibian species) as well as habitat and movement corridors for mammalian species. .

Given the direct route of discharge and the functions described above along with the length (approximately 6,480 foot length), location (direct tributary of Temescal Wash), and flow regimes (approximately 650 feet of perennial flow with riparian vegetation and ephemeral segments with a well defined ordinary high water mark) of the relevant reach, the Corps has determined there is more than a speculative or insubstantial effect on the chemical, physical, and biological integrity of the TNW and hence a significant nexus to the TNW exists. As such, this resource has the potential to significantly affect the chemical, physical, and biological integrity of the TNW.

2. **Significant nexus findings for non-RPW and its adjacent wetlands, where the non-RPW flows directly or indirectly into TNWs.** Explain findings of presence or absence of significant nexus below, based on the tributary in combination with all of its adjacent wetlands, then go to Section III.D: .

3. **Significant nexus findings for wetlands adjacent to an RPW but that do not directly abut the RPW.** Explain findings of presence or absence of significant nexus below, based on the tributary in combination with all of its adjacent wetlands, then go to Section III.D: .

D. **DETERMINATIONS OF JURISDICTIONAL FINDINGS. THE SUBJECT WATERS/WETLANDS ARE (CHECK ALL THAT APPLY):**

1. **TNWs and Adjacent Wetlands.** Check all that apply and provide size estimates in review area:
   - ☐ TNWs: linear feet width (ft), Or, acres.
   - ☐ Wetlands adjacent to TNWs: acres.

2. **RPWs that flow directly or indirectly into TNWs.**
   - ☒ Tributaries of TNWs where tributaries typically flow year-round are jurisdictional. Provide data and rationale indicating that tributary is perennial: Local runoff and flow from local springs create a perennial flow regime through approximately 650 feet of the approximately 6,480-foot relevant reach of the tributary. The attached pictures indicate water flow year round. Pictures were taken on January 6, 2014 (Lake Street Photo 6) and March 17, 2014 (Lake Street Photo 17) (2014 is the third consecutive year of drought in southern California and the Lake Elsinore area).

   - ☐ Tributaries of TNW where tributaries have continuous flow "seasonally" (e.g., typically three months each year) are jurisdictional. Data supporting this conclusion is provided at Section III.B. Provide rationale indicating that tributary flows seasonally: .

     Provide estimates for jurisdictional waters in the review area (check all that apply):
     - ☒ Tributary waters: **650** linear feet **5-10** width (ft).
     - ☐ Other non-wetland waters: acres.
       Identify type(s) of waters:

3. **Non-RPWs[8] that flow directly or indirectly into TNWs.**
   - ☒ Waterbody that is not a TNW or an RPW, but flows directly or indirectly into a TNW, and it has a significant nexus with a TNW is jurisdictional. Data supporting this conclusion is provided at Section III.C.

   Provide estimates for jurisdictional waters within the review area (check all that apply):
   - ☒ Tributary waters: **5,830** linear feet **2-35** width (ft).
   - ☐ Other non-wetland waters: acres.
     Identify type(s) of waters: .

[8]See Footnote # 3.

4. **Wetlands directly abutting an RPW that flow directly or indirectly into TNWs.**
   - ☐ Wetlands directly abut RPW and thus are jurisdictional as adjacent wetlands.
   - ☐ Wetlands directly abutting an RPW where tributaries typically flow year-round. Provide data and rationale indicating that tributary is perennial in Section III.D.2, above. Provide rationale indicating that wetland is directly abutting an RPW: .
   - ☐ Wetlands directly abutting an RPW where tributaries typically flow "seasonally." Provide data indicating that tributary is seasonal in Section III.B and rationale in Section III.D.2, above. Provide rationale indicating that wetland is directly abutting an RPW: .

   Provide acreage estimates for jurisdictional wetlands in the review area: acres.

5. **Wetlands adjacent to but not directly abutting an RPW that flow directly or indirectly into TNWs.**
   - ☐ Wetlands that do not directly abut an RPW, but when considered in combination with the tributary to which they are adjacent and with similarly situated adjacent wetlands, have a significant nexus with a TNW are jurisdictional. Data supporting this conclusion is provided at Section III.C.

   Provide acreage estimates for jurisdictional wetlands in the review area: acres.

6. **Wetlands adjacent to non-RPWs that flow directly or indirectly into TNWs.**
   - ☐ Wetlands adjacent to such waters, and have when considered in combination with the tributary to which they are adjacent and with similarly situated adjacent wetlands, have a significant nexus with a TNW are jurisdictional. Data supporting this conclusion is provided at Section III.C.

   Provide estimates for jurisdictional wetlands in the review area: acres.

7. **Impoundments of jurisdictional waters.**[9]
   As a general rule, the impoundment of a jurisdictional tributary remains jurisdictional.
   - ☐ Demonstrate that impoundment was created from "waters of the U.S.," or
   - ☐ Demonstrate that water meets the criteria for one of the categories presented above (1-6), or
   - ☐ Demonstrate that water is isolated with a nexus to commerce (see E below).

E. ISOLATED [INTERSTATE OR INTRA-STATE] WATERS, INCLUDING ISOLATED WETLANDS, THE USE, DEGRADATION OR DESTRUCTION OF WHICH COULD AFFECT INTERSTATE COMMERCE, INCLUDING ANY SUCH WATERS (CHECK ALL THAT APPLY):[10]
- ☐ which are or could be used by interstate or foreign travelers for recreational or other purposes.
- ☐ from which fish or shellfish are or could be taken and sold in interstate or foreign commerce.
- ☐ which are or could be used for industrial purposes by industries in interstate commerce.
- ☐ Interstate isolated waters. Explain: .
- ☐ Other factors. Explain: .

Identify water body and summarize rationale supporting determination: .

Provide estimates for jurisdictional waters in the review area (check all that apply):
- ☐ Tributary waters: linear feet width (ft).
- ☐ Other non-wetland waters: acres.
  - Identify type(s) of waters: .
- ☐ Wetlands: acres.

F. NON-JURISDICTIONAL WATERS, INCLUDING WETLANDS (CHECK ALL THAT APPLY):
- ☐ If potential wetlands were assessed within the review area, these areas did not meet the criteria in the 1987 Corps of Engineers Wetland Delineation Manual and/or appropriate Regional Supplements.
- ☐ Review area included isolated waters with no substantial nexus to interstate (or foreign) commerce.
  - ☐ Prior to the Jan 2001 Supreme Court decision in "*SWANCC*," the review area would have been regulated based solely on the "Migratory Bird Rule" (MBR).
- ☐ Waters do not meet the "Significant Nexus" standard, where such a finding is required for jurisdiction. Explain: .
- ☒ Other: (explain, if not covered above): The project site contains five detention basins, located east of the stream feature, at the southern end of the project site. Per a review of aerial photography, the basins were constructed in upland areas between 2006 and 2009, and are associated with water quality management for the adjacent clay mine. Per 33 C.F.R. § 328.3, these potentially jurisdictional wetland waters are artificial ponds excavated from dry land for collecting sediment from the mining site (as required per storm water management plan). Consequently, these features are not waters of the U.S.

---

[9] To complete the analysis refer to the key in Section III.D.6 of the Instructional Guidebook.

[10] **Prior to asserting or declining CWA jurisdiction based solely on this category, Corps Districts will elevate the action to Corps and EPA HQ for review consistent with the process described in the Corps/EPA *Memorandum Regarding CWA Act Jurisdiction Following Rapanos.***

Provide acreage estimates for non-jurisdictional waters in the review area, where the sole potential basis of jurisdiction is the MBR factors (i.e., presence of migratory birds, presence of endangered species, use of water for irrigated agriculture), using best professional judgment (check all that apply):

- ☒ Non-wetland waters (i.e., rivers, streams): linear feet width (ft).
- ☒ Lakes/ponds: acres.
- ☒ Other non-wetland waters: acres. List type of aquatic resource: .
- ☒ Wetlands: acres.

Provide acreage estimates for non-jurisdictional waters in the review area that do not meet the "Significant Nexus" standard, where such a finding is required for jurisdiction (check all that apply):

- ☐ Non-wetland waters (i.e., rivers, streams): linear feet, width (ft).
- ☐ Lakes/ponds: acres.
- ☐ Other non-wetland waters: acres. List type of aquatic resource: .
- ☐ Wetlands: acres.

SECTION IV: DATA SOURCES.

A. SUPPORTING DATA. Data reviewed for JD (check all that apply - checked items shall be included in case file and, where checked and requested, appropriately reference sources below):

- ☒ Maps, plans, plots or plat submitted by or on behalf of the applicant/consultant: (AMEC/Edison Boundary 2013).
- ☒ Data sheets prepared/submitted by or on behalf of the applicant/consultant.
  - ☐ Office concurs with data sheets/delineation report.
  - ☐ Office does not concur with data sheets/delineation report.
- ☒ Data sheets prepared by the Corps: March 17, 2014.
- ☒ Corps navigable waters' study: .
- ☒ U.S. Geological Survey Hydrologic Atlas: .
  - ☐ USGS NHD data.
  - ☐ USGS 8 and 12 digit HUC maps.
- ☒ U.S. Geological Survey map(s). Cite scale & quad name: 1:24K Alberhill, CA.
- ☒ USDA Natural Resources Conservation Service Soil Survey. Citation: .
- ☒ National wetlands inventory map(s). Cite name: .
- ☒ State/Local wetland inventory map(s): .
- ☒ FEMA/FIRM maps: .
- ☒ 100-year Floodplain Elevation is: (National Geodectic Vertical Datum of 1929)
- ☒ Photographs: ☒ Aerial (Name & Date): Google Earth Pro 2006, 2009, and 2014.
  or ☒ Other (Name & Date): Ground photographs taken at the site on January 6, 2014 provided by Castle and Cooke and ground photos taken at the site on March 17, 2014 by Corps Personnel.
- ☒ Previous determination(s). File no. and date of response letter: .
- ☒ Applicable/supporting case law: .
- ☒ Applicable/supporting scientific literature: .
- ☒ Other information (please specify): . Validation of Jurisdictional Delineation for the Lake Street Project Site, City of Lake Elsinore, Riverside County, CA. Prepared by the Planning Associates, April 30, 2012.

B. ADDITIONAL COMMENTS TO SUPPORT JD:

The relevant reach is an approximately 6,480 foot length of streambed which flows in a northwest direction into Temescal Wash. Temescal Wash flows into the Prado Basin, which flows into the Santa Ana River and thence the Pacific Ocean. The streambed contains two ephemeral segments comprising approximately 90% of the total streambed and one perennial segment that comprises approximately 10% of the streambed and is located in between the two ephemeral segments.

The approximately 650-foot segment with perennial flows has the potential to support fish (e.g. chub and dace) and amphibians and other aquatic resources, as well as provide active nutrient (and pollutant) transport and facilitate aeration and oxidative/reductive processes in the water column and creek sediment. These processes also occur during storm and flood events in the ephemeral segments of the creek. These functions reduce the amount of pollutants reaching a TNW. The tributary also has the capacity to transfer nutrients and organic carbon that support downstream foodwebs, as the drainage is vegetated by upland, riparian, and wetland species. These functions combined with the size, location, and flow regimes of the tributary provide a significant relationship to the physical, chemical, and biological integrity of the TNW. As such, this resource has the potential to significantly affect the chemical, physical, and biological integrity of the TNW.

As additional features of note, the project site contains five detention basins, located east of the stream feature, at the southern end of the project site. Per a review of aerial photography, the basins were constructed in upland areas between 2006 and 2009, and are associated with water quality management for the adjacent clay mine. Per 33 C.F.R. § 328.3, these potentially jurisdictional wetland waters are artificial ponds excavated from dry land for collecting sediment from the mining site (as required per storm water management plan). Consequently, these features are not waters of the U.S.

JURISDICTIONAL DELINEATION REPORT FOR THE LAKE STREET PROJECT SITE CITY OF LAKE ELSINORE, RIVERSIDE COUNTY, CA

Assessor's Parcel Nos. (Small Portions of)
390-130-026, 390-160-003, 390-160-006, 390-160-011, 390-190-016, 390-130-029, 390-190-015, 390-190-014 & 389-020-035

Project Site Location Portion of Sections 15 & 22, Township 5 South, Range 5 West on the Alberhill, CA, 7.5' United States Geological Surveys (USGS) Quadrangle

3.5± Acres
(Approx. Total Acres Surveyed -- Approx. 6,480 Lineal Feet in Length)

Prepared for:

Mr. Tom Tomlinson
Castle & Cooke Lake Elsinore Commercial, LLC
4113 Pearl St.
Lake Elsinore, CA 92530

Prepared by:

The Planning Associates
Hardy Strozier, Esq., AICP
3151 Airway Avenue Suite R-1
Costa Mesa, California 92626
PlanningAssoc@aol.com

Principal Investigators:
Hardy Strozier, Kate Radcliffe-Lang
The Planning Associates
3151 Airway Avenue, Suite
Costa Mesa, CA 92626
714-556-5200
PlanningAssoc@aol.com

Field Survey Conducted On:
6 November, 2008

Report Date: December 29, 2008

Ex. 5

EXECUTIVE SUMMARY— The Planning Associates (TPA), Hardy M. Strozier, Kate Radcliffe-Lang (Regulatory Planners) with the assistance of Castle & Cooke Staff, Kevin Beals and Steve Ward prepared a jurisdictional delineation for the Castle & Cooke Lake Street project within Assessor Parcel Numbers 390-130-029, 390-130-026, 390-160-003, 390-160-006, 390-160-011, 390-190-016, 390-190-015, 390-190-014 & 389-020-035 (approximately 3.5± acres in area approximately 6,480 lineal feet in length) located along the east interface of Lake Street, in the City of Lake Elsinore, Riverside County, California.

A determination of wetlands and waters subject to jurisdictions of the U.S. Army Corps of Engineers (ACOE) under Section 404 of the Clean Water Act, Regional Water Quality Control Board and the California Fish and Game (CDFG) under CDFG Code Division 2, Chapter 2, and Section 1600 *et seq.* was made for the Lake Street project site, hereafter referenced as the "Site". A Field Delineation Survey was conducted on the 6th of November, 2008. A subsequent engineering survey of the ACOE and CDFG jurisdictional boundaries set by TPA along each 100 foot section of the stream course was conducted by KWC engineers.

Impacts to Criteria, Narrow Endemic and/or other sensitive species potentially present within the Project's footprint (within very small lineal portions of these MSHCP Cells: 3751, 3854, 3855, 3954 & 4056) are not expected to be significant due to one or more of the following factors: 1) No suitable habitat exists on site for their occupation; and/or, 2) the use of the site is limited to occasional foraging or seasonal activity and the site is not a substantial portion of their distributional range, and 3) NO Amphibian, NO Mammalian, and NO Special Linkage Areas exist as reported within the Assessor Parcel search of the MSHCP; seven Criteria Area Species and the nine Narrow Endemic Plant Species are listed for each Assessor Parcel number within the project Site, but is not significant or not observed during the site visit and evaluation. The burrowing owl has a low potential for occurrence. The proposed project will restore the stream course area with a 100% native plant palette with year round hydrology. A 2008 spring time presence/absence survey was conducted for this area by Dr. Jack C. Turner and Philippe Vergne reporting that the stream course area does not support any threatened or endangered species.

The Site contains a single blue-line un-named drainage (as depicted on the U.S. Geological (USGS) topographic map, Alberhill Quad., Riverside County [dated 1954, Photorevised 1982]. The drainage surface feature is locally known as an unnamed flow line and carries local runoff and the flow from local springs, northwest into a broad alluvial plain within the influence of Temescal Wash. Only during major periodic precipitation events does this small wash become confluent with Temescal Wash.

A jurisdictional wetland must exhibit all three of the wetland parameters as described in the Wetland Manual (ACOE 1987). Predicated on TPA's investigation of existing site conditions, ACOE jurisdictional wetlands are presently located within certain lengths of the unnamed flow line.

Sedimentation, erosion features, and the deposition of debris and detritus evidenced horizontal hydrology. The 90% of the onsite blue-line feature is ephemeral, carrying water only during storm events. The remaining 10% of the onsite flow line feature has sitting and/or flowing water

coming from off-site sources from the west. Approximately 1.31 acres of ACOE "waters of the U.S." were found on the project site. Based on the most current design plans, all of the ACOE "waters of the U.S." would be permanently impacted by the proposed Specific Plan project.

No isolated conditions were observed within the boundaries of the proposed project, the RWQCB jurisdiction follows that of ACOE jurisdictional "waters of the U.S."

The onsite drainage is considered jurisdictional by the CDFG in essentially the same manner as the ACOE. The CDFG jurisdiction falls within the ACOE jurisdiction in all of the measurements except the jurisdictional influence was taken to the top of the ordinary stream bank and to riparian vegetation on either side of the stream course. There was evident a discernable difference from the "top of bank" and the Ordinary High Water Mark (OHWM) and the CDFG flow line, bed and bank profile. Minor riparian resources were present within certain areas and lengths of the flow line and were not present in others. Most of the vegetation in and along the stream course was upland and exotic non-native species, i.e. eucalyptus. Approximately 2.43 acres of CDFG jurisdiction are located on the project site. Based on the most current design plans, all of the CDFG jurisdiction would be permanently impacted by the proposed Specific Plan project.

Wildlife functions and values of the drainages on site are low owing to a general absence of water or succulent vegetation on which to feed. The extent of habitat degradation on this site resulting from mining, road construction, off-road vehicles, erosion, historical agriculture, exotic vegetation, illegal dumping, and domestic animals contributes to the low wildlife values of the site.

The property is located in the Elsinore Area Plan of the western Riverside County MSHCP. The "nine" assessor parcels occur within five Criteria Cells (3751, 3854, 3855, 3954 and 4056) of the MSHCP. Conservation within these Cell Groups is to focus on assembly of Proposed Core 1. Conservation within these four Cells will focus on chaparral and recovery of coastal sage scrub habitat. The project site is the subject of a de-facto type Habitat Evaluation and Acquisition Negotiation Strategy (HANS) pursuant to an Acquisition Agreement by the County of Riverside. This HANS has pre-mitigated this stream course portion of the project site for Multiple Species Habitat Conservation Program (MSHCP) purposes. The following MSHCP evaluation is provided noting that the area has been pre-mitigated.

Cell #3751 is a small part of Cell Group J, which contains a total of 12 Cells. The Cell Group J will be connected to upland habitat proposed for conservation in Cell #3853 and #3855, and Cell Group O all to the south, to coastal sage scrub habitat proposed for conservation in Cell Group L to the east, to riparian habitat proposed for conservation in Cell Group I to the west and to existing PQP Lands to the north and west. Conservation within this Cell Group will range from 75%-85% of the Cell Group focusing in the western and northern portions of the Cell Group.

Areas conserved within Cell #3854 will be connected to the coastal sage scrub habitat proposed for conservation in Cell Group J to the north and in Cell #3855 to the east. Conservation within this Cell will range from 10%-20% of the Cell focusing in the northeastern portion of the Cell.

Areas conserved within Cell #3855 will be connected to coastal sage scrub, woodland and forest habitat proposed for conservation in Cell Group J to the north. Conservation within this Cell will range from 25%-35% of the Cell focusing in the northern portion of the Cell.

Areas conserved within Cell Group U (Cells 3954 and 4056) will be connected to chaparral and coastal sage scrub habitat proposed for conservation Cell Group T to the west and in Cell #4156 to the south and to chaparral and grassland habitat proposed for conservation in Cell #4057 to the east. Conservation within this Cell Group will range from 40%-50% of the Cell Group focusing in the western and central portions of the Cell Group.

No meadow or marshes are found within the Site. Minimal riparian habitat is found on Site, which is scattered and located along various portions of the flow line and dry bed and bank. The project comports with current interpretations of the Western Riverside MSHCP.

There were two (2) approved full EIR's that covered this same area of the project Site. They were:

1. The June 1992 Addendum to the Alberhill Ranch Specific Plan 89-2, Final Environmental Report, State Clearinghouse No. 88090517 for the Murdock Alberhill Ranch prepared by The Planning Associates. [Alberhill Ranch Final EIR, Adopted August 28, 1989 and Addendum submitted May 1991, and Adopted September 10. 1991.]; and

2. The EIR Addendum II to the Alberhill Ranch Specific Plan EIR (No. 89-2 for Murdock Alberhill Ranch Specific Plan Vesting Tentative Tract Maps No.'s 30836 & 28214, prepared by The Planning Associates, dated November 28, 2003.

Midbust, Jessica

From:	David Kates <dkates@sonic.net>
Sent:	Wednesday, May 04, 2016 9:27 AM
To:	'Uchida, Jensen'; 'Nicholas Sher'; VIG/ASP
Cc:	'Rex Wait'
Subject:	Comments on Alberhill System Project DEIR
Attachments:	NHC Comments Attachment 2 - Letter to SCE.PDF; NHC Comments on Alberhill DEIR A0909022.pdf; NHC Comments Attachment 1 - LGIA.PDF
Follow Up Flag:	Follow up
Flag Status:	Completed

Please find attached the comments of Nevada Hydro on the draft EIR for Alberhill.

We would be happy to discuss any aspect of our comments.

Thanks for the consideration.

David

David Kates
The Nevada Hydro Company
3510 Unocal Place, Suite 200
Santa Rosa, CA 95403
707.570.1866

THE HYDRO COMPANY, INC.
DBA THE NEVADA HYDRO COMPANY, INC.

May 4, 2016

Mr. Nicholas Sher,
California Public Utilities Commission
505 Van Ness Avenue
San Francisco, CA 94102

Mr. Jensen Uchida,
California Public Utilities Commission
505 Van Ness Avenue
San Francisco, CA 94102

VIG.ASP@ene.com
California Public Utilities Commission
RE: VIG/ASP
c/o **Ecology and Environment, Inc.**
505 Sansome Street, Suite #300
San Francisco, CA 94111

RE: Comments on the Draft Environmental Impact Report for SCE's Alberhill Substation Project

Dear PUC CEQA Team

On April 14, 2016, the Public Utilities Commission of the State of California ("Commission") published its draft environmental impact report ("DEIR") for Southern California Edison's ("SCE") Alberhill project.[1] The Nevada Hydro Company, Inc. ("Nevada Hydro") is a party to the Commission's proceeding. Although the Commission and its staff consistently meet and usually exceed the mandates of California Environmental Quality Act ("CEQA"), as described herein, Nevada Hydro was frankly flabbergasted to see that in this case the DEIR does not meet the requirements of CEQA because it fails to include facilities SCE is obligated to construct at Alberhill and fails to analyze other facilities connected to and dependent upon the existence of Alberhill. While SCE apparently did not describe the contractual obligations it has assumed to the Commission in its application[2], in its amendment to its application,[3] in its original and amended Proponent's Environmental Assessment ("PEA") submitted as

[1] / *Valley-Ivyglen 115-kV Subtransmission Line and Alberhill System Projects, Draft Environmental Impact Report,* State of California Public Utilities Commission, A.07-01-031, A.09-09-022, SCH NOS. 2008011082, 2010041031, April 2016.

[2] / *Application of Southern California Edison Company Ill 338-E) for a Permit to Construct Electrical Facilities With Voltages Between 50 kV and 200 kV or New or Upgraded Substations with High Side Voltages Exceeding 50 kV: Alberhill System Project*, September 30, 2009.

[3] / *Amendment to the Application of Southern California Edison Company (U 338-E) for a Certificate of Public Convenience and Necessity: Alberhill System Project*, March 12, 2010.

part of the applications,[4] nor as the Commission progressed through its analysis, the Commission's consultant, Ecology and Environment, Inc. ("E&E") also failed to identify this obligation and its ramifications under CEQA. As a result, Nevada Hydro believes that:

1. SCE's application is not complete and should not have been deemed complete under Commission Rules; and,
2. The DEIR must be extensively revised to incorporate these significant omitted issues and then be recirculated in order for the Commission to comply with the CEQA.

1.0. Introduction: Nevada Hydro's Lake Elsinore Advanced Pumped Storage project

The Federal Energy Regulatory Commission ("FERC") is responsible for licensing Nevada Hydro's proposed 500 MW Lake Elsinore Advanced Pumped Storage ("LEAPS") facility and its associated lines ("gen–ties") connecting the facility to the grid under its Project No. 14227. The project is being licensed as a major unconstructed hydroelectric facility under the provisions of the Federal Power Act of June 10, 1920 ("FPA"), Chapter 285 and under licensing regulations found at 18 CFR, Subchapter B, Part 4. The FERC is also the lead federal agency for National Environmental Policy Act ("NEPA") compliance. In 2007, FERC staff published a Final Environmental Impact Statement ("Final EIS") as required by NEPA for LEAPS[5], in which it determined the point at which LEAPS is to connect to the Valley–Serrano transmission line, identified therein as the "Lake" site.

This gen–tie consists of nearly 15 miles of 500 kV wire suspended on roughly 41 towers, with a portion running underground, along a route identified in the Final EIS from LEAPS to the Lake site. Construction is expected to cost approximately $260 million.

In addition to the referenced NEPA review, this route and connection point have been subject to previous CEQA analysis by the Commission. First, as far back as 2002, as part of the Valley-Rainbow Interconnect proceedings, the Commission and the BLM prepared a detailed analysis of a broad range of alternative transmission alignments meeting, in whole or in part, the stated objectives of the proposed project for compliance with CEQA.[6] As indicated in that analysis, Nevada Hydro's route and connection point were identified as potentially the only viable route for the proposed connection.

---

[4] / Southern California Edison Company, *Proponent's Environmental Assessment Alberhill System Project*, September 30, 2009 ("PEA") and the Amended PEA filed April 2014.

[5] / Federal Energy Regulatory Commission, *Final Environmental Impact Statement for Hydropower License – Lake Elsinore Advanced Pumped Storage Project*, FERC Project No. 11858, FERC/EIS-0191F, January 2007 ("Final EIS"). This document is now in the process of being updated in the present docket.

[6] / *Interim Preliminary Report on Alternatives Screening for: San Diego Gas & Electric Company Valley - Rainbow 500 kV Interconnect Project*, CPCN Application No. 01-03-036, U.S. BLM Case No. CACA-43368.

More recently, in the final environmental impact report the Commission prepared for the Sunrise Powerlink project, the Commission evaluated this route and connection point as part of the environmentally superior transmission alternative to the proposed Sunrise project.[7]

2.0. The Interconnection Agreement between SCE and Nevada Hydro requires a 500 kV Connection linking LEAPS to the Alberhill substation, missing from the DEIR.

Commencing in 2006, SCE, the California Independent System Operator ("CAISO") and Nevada Hydro began working together to interconnect LEAPS to the CAISO's transmission system under the CAISO's interconnection procedures for large generators.[8] This work included execution of System Impact and Facilities Study Plans and preparation by SCE of System Impact and Facilities Studies. The project is number 72 in the CAISO interconnection queue.[9] Based upon SCE's findings from these studies, the parties negotiated and executed a Large Generator Interconnect Agreement ("LGIA") which sets forth the terms and conditions under which LEAPS will connect to the CAISO controlled grid through the SCE high voltage system.[10]

One of the major issues raised during this negotiation of the LGIA involved identifying the actual connection point. Originally, the connection was to be at a switchyard to be constructed by Nevada Hydro as described in the Final EIS called "Lake". Nevada Hydro contended that it must use the site specified in the Final EIS, while SCE advanced planning for their Alberhill substation and insisted that the connected occur at their proposed Alberhill site. The fully executed LGIA now identifies Alberhill substation as the connection point. The site SCE proposed for its Alberhill substation in this proceeding is approximately one mile southeast of the FERC–identified Lake location.

Further, the LGIA requires that the parties coordinate their construction schedules so that the completion of Alberhill and other system upgrades would coincide with the timing for the commercial operation date for LEAPS, requiring Nevada Hydro to now commence funding these design, engineering, procurement and construction activities SCE has described in the LGIA. The omission of SCE's obligations under the LGIA from the DEIR has thrown a "monkey wrench" into the expectations of Nevada Hydro, SCE as well as the CAISO. The CAISO is also a party to the LGIA, and has planned their own needs with the expectation that both SCE and Nevada Hydro would meet the responsibilities enumerated in the LGIA.

---

[7] / California Public Utilities Commission and Bureau of Land Management, *Final Environmental Impact Report/Environmental Impact Statement and Proposed Land Use Amendment – San Diego Gas & Electric Company Application for the Sunrise Powerlink Project*, SCH No. 2006091071, DOI Control No. DES-07-58, October 2008.

[8] / This procedure was imposed on Nevada Hydro by SCE and the CAISO notwithstanding that LEAPS is a storage facility and not a generator.

[9] / Available at http://www.caiso.com/Documents/ISOGeneratorInterconnectionQueue.pdf. The project is in the fourth position from the top of the list.

[10] /Terms of the LGIA were finalized in FERC Dockets ER12–1302 and ER12–1305 through a FERC–sponsored settlement proceeding that became final on February 21, 2014. A copy of the agreement as filed with the FERC is included as Attachment 1 to this letter.

Among the many provisions of this agreement is that SCE has assumed the obligation to connect LEAPS to its 500 kV Valley Serrano line at Alberhill under the provisions identified in the LGIA. If it is unable to do so at Alberhill, SCE remains obligated to make this connection nonetheless:

> *In the event that SCE modifies its plan for the Alberhill 500/115 kV Substation . . . then the Participating TO would develop an alternate plan to connect the Generating Facility to the Valley – Serrano 500kV Transmission Line. The alternate plan for connection to the Valley-Serrano 500kV Transmission Line may be subject to CPUC review and concurrence if this information has not yet been evaluated as part of the LGIP review process.* [Emphasis added]

A copy of a page extracted from the LGIA with the single line diagram SCE prepared showing its plans for connecting LEAPS, as well as the above quote obligation is included as Exhibit 1 to this letter.

Due to the omission of the LGIA obligation from the DEIR, SCE may be obligated to undertake interconnecting LEAPS at Lake (or another nearby site), with the impacts of this alternative absent from the DEIR, notwithstanding it would be a direct consequence of the omission. Clearly also, if SCE is unable to meet its obligations set forth in the agreement, it could be subjected to certain consequences as specified in the LGIA. Please see Nevada Hydro's recent letter to SCE on this issue, (Attachment 2), as an indicator of how serious this matter may be to the parties to this agreement.

3.0. CEQA requires that the DEIR include the obligation of SCE to interconnect LEAPS at Alberhill and as it does not, it fails to meet the mandates of CEQA.

CEQA requires that all relevant parts of a project, including reasonably foreseeable future expansion and other activities that are part of the project, must be included in the Project Description. The test expressed in the California Supreme Court's 1986 *Laurel Heights* decision: "an EIR must include an analysis of future expansion or other actions if: (1) it is a reasonably foreseeable consequence of the initial project, and (2) the future expansion or action will be significant in that it will likely change the scope or nature of the initial project or its environmental effects."[11] CEQA also requires the study of actions related to a proposed project in the environmental document. These "related actions" include "connected actions," "indirect impacts," and "cumulative impacts."[12] As both parties have obligated themselves under contract to connect LEAPS at Alberhill, the connection of LEAPS through Alberhill is clearly a "reasonably foreseeable consequence" as well as a "connected action".[13] Further, routing more than 15 miles of 500 kV transmission from LEAPS to Alberhill is "significant in that it will likely change the scope or nature of the initial project or its environmental effects." Nonetheless, the

---

[11] /See *Laurel Heights Improvement Ass'n v. Regents of Univ. of Cal*. (1988) 47 Cal. 3d 376.

[12] /Each of these related actions have been fully described by this Commission previously. See for example, *Assigned Commissioner's Ruling Addressing Newly Disclosed Environmental Information*, In the Matter of the Application of San Diego Gas & Electric Company (U 902 E) for a Certificate of Public Convenience and Necessity for the Sunrise Powerlink Transmission Project, Application 06-08-010, July 27, 2007, at Page 2.

[13] /See Note 12 describing "connected actions" as those activities that are related in such a way that they should be considered parts of a single action. Connected actions, because they are closely related, must be analyzed in the same CEQA document as the proposed action.

description and analysis of the 500 kV connection from LEAPS to the DEIR–identified site for Alberhill is absent from the DEIR. Also absent are the facilities within the Alberhill site and beyond that are required for the connection to occur, facilities described in detail in the LGIA.

Nevada Hydro understands that in order for the Commission to comply with CEQA, the 500 kV line connecting LEAPS to Alberhill must be identified and analyzed in this DEIR. Further, the facilities required for this connection within the substation footprint and potentially elsewhere must also be included. Thus, the Commission must reexamine the alternatives selected for evaluation in DEIR in light of this significant omitted information. Otherwise, under what permitting scenario can Nevada Hydro obtain siting approval to reach the Valley Serrano transmission line without triggering a CEQA fragmentation claim? I am sure this is potential litigation and delay none of us wish to face.

Section 15205(a) of Title 14 of the Code of California Regulations ("CCR") identifies the focus of review of an EIR is to be on "the sufficiency of the document in identifying and analyzing the possible impacts on the environment and ways in which the significant effects of the project might be avoided or mitigated." Based upon its review, Nevada Hydro believes that the DEIR lacks the description of and impacts of the 500 kV connection from LEAPS to Alberhill and also does not account for the connection facilities needed to integrate LEAPS into the CAISO system as required by the LGIA.

Nevada Hydro respectfully suggests that § 15088.5(a) of CCR Title 14 controls this situation:

> *A lead agency is required to recirculate an EIR when significant new information is added to the EIR after public notice is given of the availability of the draft EIR for public review under Section 15087 but before certification. As used in this section, the term "information" can include changes in the project or environmental setting as well as additional data or other information. New information added to an EIR is not "significant" unless the EIR is changed in a way that deprives the public of a meaningful opportunity to comment upon a substantial adverse environmental effect of the project or a feasible way to mitigate or avoid such an effect (including a feasible project alternative) that the project's proponents have declined to implement.*

The omission from the DEIR of analysis and conclusions of more than 15 miles of 500 kV transmission lines, supporting towers and other facilities needed to interconnect LEAPS to the grid in this populated area at minimum, presents "significant new information" as it is described in this section, requiring the Commission to recirculate the DEIR upon concluding this additional required analysis.

4.0. SCE may have neglected to inform the Commission of the full scope of the proposed project, and if so, the application should not have been accepted for filing and deemed complete.

Although SCE expended considerable time and resources working with Nevada Hydro and the CAISO to interconnect LEAPS, it appears to Nevada Hydro that SCE may have misinformed the Commission by excluding mention of the LEAPS LGIA during the Commission processing of its application.

For example, in its original PEA, filed with the Commission in September 2009, SCE mentioned LEAPS only briefly in Chapter 6:

> *In addition to the developments listed below, the Nevada Hydro Company is proposing the Lake Elsinore Advanced Pump Storage (LEAPS) project that would include a pump storage facility utilizing Lee Lake (approximately 1.5 miles northwest of the Alberhill Substation site) and a reservoir to be created in the Cleveland National Forest west of the City of Lake Elsinore. The proposed LEAPS project also includes construction of transmission lines between the pump storage facility and SCE's Valley-Serrano 500 kV transmission line and San Diego Gas and Electric's (SDG&E's) Talega-Escondido 220 kV transmission line.*

In 2009, when SEC filed its PEA, it was well aware of the interconnection process it was leading with Nevada Hydro to connect LEAPS, noting only that somehow the existence of LEAPS fell into the category of "Cumulative Impacts". Although the Amended PEA submitted in April 2011 did not include an update to Chapter 6, through most of 2011, the parties were negotiating terms of the LGIA, and in drafts from late 2010, SCE had already insisted that the connection point be identified as "Alberhill" rather than "Lake" as Nevada Hydro preferred.

While the LGIA had not been executed when it refiled its application with the Commission in early 2011, SCE was aware of the potential obligations it was incurring to connect LEAPS at Alberhill. When the parties finally executed the LGIA in late 2013 and SCE thereby formally assumed its obligation to interconnect LEAPS, perhaps it should have then notified the Commission of this obligation and new purpose for Alberhill in an amendment to its application or other notice to the Commission's CEQA team, but apparently did not.

It may seem, therefore, that SCE may have not properly informed the Commission of important information relevant to CEQA, and through that omission, failed to present crucial details necessary for the Commission to reach a reasoned and informed decision under CEQA.

5.0. E&E may have been misled by SCE's omissions, but they also failed to perform a rudimentary investigation that would have allowed the DEIR to meet the mandates of CEQA it now does not.

There are only three parties to this proceeding: a representative from SCE, a representative from this Commission, and Nevada Hydro. In its motion for party status, Nevada Hydro alerted the Commission to the issues described herein, yet Nevada Hydro was never contacted during the preparation of this DEIR.

In its PEA, SCE stated as follows:[14]

> *Previous applications from the Nevada Hydro Company to the CPUC for a Certificate of Public Convenience and Necessity (CPCN) to construct the Lake Elsinore Advanced Pump Storage (LEAPS) project have included a proposed switchyard . . .*

SCE, Commission staff and E&E should have known (or could easily have found out) that Nevada Hydro's application to the Commission was for a transmission project not for approval of a pumped hydro project, which is jurisdictional exclusively to FERC under the Federal Power Act. Nonetheless,

[14] /See Note 4 at Page 2–1.

even this roundabout notice should have triggered inquiry of how LEAPS was to connect to the grid. Were there to be 2–500 kV connection points into the Valley–Serrano line within a mile of each other or were other configurations under consideration and might one involve Alberhill?

Then, in the DEIR, E&E failed to grasp the rudimentary basics of the business of constructing energy assets. In Table 3–1, for example, consideration of Nevada Hydro's Lake substation site was eliminated from further consideration, apparently due to confusion over the project to be assessed.[15] E&E apparently looked to Nevada Hydro's proposed (and quite separate) transmission line project, rather than properly considering the site as a connection point for the LEAPS 500 kV gen tie under the LGIA, this notwithstanding findings in the Final EIS, and the Commission's own EIS/EIR for the Sunrise project on the suitability of this site.

6.0. Conclusion

Nevada Hydro understood from conversations with SCE and Commission staff, that when the Commission evaluated Alberhill, it would incorporate into its analysis routing for the 500 kV connection from LEAPS into Alberhill and other necessary facilities. The omission from consideration of the obligations SCE has assumed reflected in the LEAPS LGIA is fundamental to the flaws in the DEIR that must be corrected to meet the mandates of CEQA.

However one may wish to characterize the cause of the omission of information describing SCE's obligations under the LGIA, Public Resources Code § 21166 clearly requires that an EIR be updated (whether through preparation of a subsequent or supplemental EIR) when:

> *(a) Substantial changes are proposed in the project which will require major revisions of the environmental impact report.*
>
> *(b) Substantial changes occur with respect to the circumstances under which the project is being undertaken which will require major revisions in the environmental impact report.*
>
> *(c) New information, which was not known and could not have been known at the time the environmental impact report was certified as complete, becomes available.*

Perhaps SCE had no obligation to mention the LGIA to the Commission until it was finally executed and approved, in which case it should have proposed "substantial changes" to the proposed project, thereby activating subsection (a). Perhaps final execution and approval of the LGIA then altered the "circumstances under which the project is being undertaken" in which case, subsection (b) rules. Least likely, the notice to the Commission in this filing may be seen as providing "new information, which was not known and could not have been known", which would thereby activate subsection (c). In any case, CEQA requires that the DEIR as it now appears must be corrected to account for SCE's obligations in the LGIA.

---

[15] /E&E may also have placed too much credence in SCE's "evaluation" of the Lake site contained in its PEA at page 2–1, given the SCE's stated preference for its selected site as well as competitive issues.

Nevada Hydro looks forward to working with Commission and E&E staff to provide factual information to help correct this deficiency.

Sincerely,

David Kates

David Kates

Enclosures

Exhibit 1
Extracted Image from page 84 of the LGIA

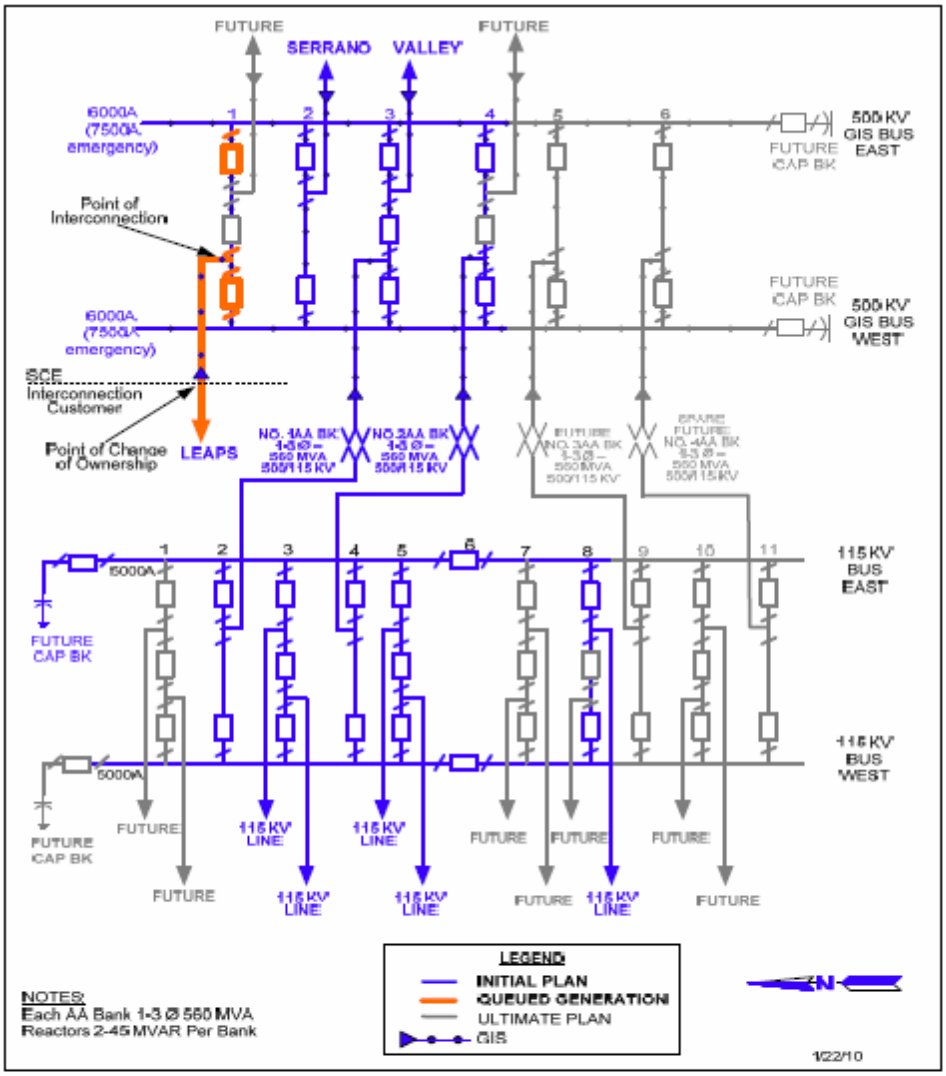

Note: The LEAPS Generating Facility is proposed to be connected to the Participating TO's Alberhill Substation Project. This substation project is still under development as part of the long-term transmission plan and has been approved by the CAISO Board. Also, a CPCN for the Alberhill 500/115 KV Substation and Valley/Serrano Line loop has been filed at the CPUC. In the event that SCE modifies its plan for the Alberhill 500/115 kV Substation, or the substation project does not receive CPUC approval, then the Participating TO would develop an alternate plan to connect the Generating Facility to the Valley – Serrano 500kV Transmission Line. The alternate plan for connection to the Valley-Serrano 500kV Transmission Line may be subject to CPUC review and concurrence if this information has not yet been evaluated as part of the LGIP review process.

Source: Page 201 of 228 of the pdf compliance filing SCE made with FERC on September 8, 2014 in Docket Nos. ER12-1302 and ER12-1305 (page 84 of the LGIA, Appendix A, Section 6).

Attachment 1

Copy of Filed LGIA

SOUTHERN CALIFORNIA EDISON®
An EDISON INTERNATIONAL® Company

James A. Cuillier
Director
FERC Rates & Regulation

September 8, 2014

Ms. Kimberly D. Bose, Secretary
Federal Energy Regulatory Commission
888 First Street, N.E.
Washington, DC 20426

RE: FERC Docket Nos. ER12-1302-000 and ER12-1305-000

Dear Ms. Bose:

In compliance with paragraph 4 of the Federal Energy Regulatory Commission's ("Commission") order issued in the aforementioned dockets (148 FERC ¶ 61,112), Southern California Edison ("SCE") is submitting via e-Tariff, two Large Generator Interconnection Agreements ("LGIA") among SCE, California Independent System Operator Corporation ("CAISO"), and Nevada Hydro Company, Inc. ("Nevada Hydro"), Service Agreement No. 119 under SCE's Transmission Owner Tariff ("TO Tariff"), FERC Electric Tariff, Volume No. 6. One LGIA has an effective date from August 11, 2012 through December 31, 2012, and the other LGIA has an effective date of January 1, 2013.

In the order, the Commission accepted a settlement, including the two LGIAs submitted herein, which resolved all issues in these dockets and directed either SCE or the CAISO to submit a compliance filing within thirty (30) days of the date of the order with the two versions of LGIAs in e-Tariff format.

The documents submitted with this filing consist of this letter of transmittal and all attachments hereto, and the LGIAs.

P.O. Box 800
2244 Walnut Grove Ave.
Rosemead, CA 91770

SCE has served copies of this filing upon those entities whose names appear on the service list compiled by the Commission for these dockets.

Very truly yours,

JAMES A. CUILLIER

FEDERAL ENERGY REGULATORY COMMISSION

Service List

Party	Primary Person or Counsel of Record to be Served	Other Contact to be Served
California Department of Water Resources	Peggy Bernardy Staff Counsel California Department of Water Resources pbernard@water.ca.gov	Lee Terry Trans. Planning Branch California Department of Water Resources Div. of Operations and Maintenance P.O. Box 942836, JOC LL-90 Sacramento, California 94236-0001 lterry@water.ca.gov
California Department of Water Resources	E Service Spiegel & McDiarmid LLP 1875 Eye St, NW Suite 700 Washington, District of Columbia 20006 United States eService@spiegelmcd.com	Michael Werner California Department of Water Resources PO Box 942836 Sacramento, California 94236-0001 mwerner@water.ca.gov
California Department of Water Resources	Latif Nurani Spiegel & McDiarmid LLP 1875 Eye Street, NW Suite 700 Washington, District of Columbia 20006 United States latif.nurani@spiegelmcd.com	Lisa Dowden Spiegel & McDiarmid LLP 1875 Eye Street, NW Suite 700 Washington, District of Columbia 20006 Lisa.Dowden@spiegelmcd.com
California Department of Water Resources	Deborah Barnes Deputy Attorney General California Office of Attorney General P. O. Box 944255 Sacramento, California 94244-2550 United States deborah.barnes@doj.ca.gov	

California Independent System Operator Corporation.	Robert Wolinsky Lawyer Hogan Lovells US LLP 555 13th Street Washington, District of Columbia 20004 United States rbwolinsky@hhlaw.com	Kevin M Downey, ESQ Hogan Lovells US LLP 555 Thirteenth Street, N.W. Washington, District of Columbia 20004 kevin.downey@hoganlovells.com
California Public Utilities Commission	Gregory Heiden California Public Utilities Commission 505 Van Ness Ave. San Francisco, California 94102 United States gxh@cpuc.ca.gov	Mihai Cosman 505 Van Ness Ave Fl 4 San Francisco, California 94102-3214 San Francisco mr2@cpuc.ca.gov
California Public Utilities Commission		Nicholas Sher California Public Utilities Commission 505 Van Ness Ave Rm 5130 San Francisco, California 94102 nms@cpuc.ca.gov
Federal Energy Regulatory Commission		Fredrick Wilson Commission Staff Counsel 888 1st St NE Washington, District of Columbia 20426-0001 fredrick.wilson@ferc.gov
San Diego Gas & Electric Company		Paul A. Szymanski Attorney at Law San Diego Gas & Electric Company 101 Ash St Fl 13 San Diego, California 92101 PSzymanski@semprautilities.com

Southern California Cities	Bonnie Blair Attorney Thompson Coburn LLP 1909 K Street, N.W. Suite 600 Washington, District of Columbia 20006 United States bblair@thompsoncoburn.com	Margaret Elizabeth McNaul Thompson Coburn LLP 1909 K Street, N.W. Suite 600 Washington, District of Columbia 20006 mmcnaul@thompsoncoburn.com
Southern California Cities		Carrie A Thompson Integrated Resources Manager City of Anaheim, California 201 S. Anaheim Blvd. Suite 802 Anaheim, California 92805 cathompson@anaheim.net
Southern California Cities		George F. Morrow Director of Utilities Azusa Light, Power & Water 729 N. Azusa Avenue Azusa, California 91702 gmorrow@ci.azusa.ca.us
Southern California Cities		Fred Mason Electric Division City of Banning, California 176 East Lincoln Banning, California 92220 fmason@ci.banning.ca.us
Southern California Cities		Hsi Bang (Bob) Tang Power Contracts/Projects Manag City of Riverside, California 3435 14th Street Riverside, California 92501 btang@riversideca.gov
Southern California Edison Company	Robert Kang 2244 Walnut Grove Avenue Rosemead, California 91770 Robert.Kang@sce.com	FERC Case Administration Southern California Edison Company PO Box 800 Rosemead,California 91770-0800 FERCCASEADMIN@SCE.COM

Southern California Edison Company		James A Cuillier Director of FERC Rates & Regulation Southern California Edison Company 2244 Walnut Grove Ave. Rosemead, California 91770 james.cuillier@sce.com
The City of Santa Clara, California and the M-S-R Public Power Agency	Peter Scanlon Duncan, Weinberg, Genzer & Pembroke PC 1615 M Street Suite 800 Washington, District of Columbia 20036 United States pjs@dwgp.com	Gina Gargano-Amari Legal Secretary Individual Duncan Weinberg Genzer & Pembroke PC 1615 M Street, NW Suite 800 Washington, District of Columbia 20036 gga@dwgp.com
The City of Santa Clara, California and the M-S-R Public Power Agency	Lisa Gast Attorney Duncan, Weinberg, Genzer & Pembroke PC 1615 M Street Suite 800 Washington, District of Columbia 20036 United States lsg@dwgp.com	Martin Hopper General Manager msr.general.manager@gmail.com
The City of Santa Clara, California and the M-S-R Public Power Agency	Joshua Adrian Individual 1615 M. Street, NW Suite 800 Washington, District of Columbia 20036 United States jea@dwgp.com	
Nevada Hydro Company, Inc.	David Kates 2416 Cades Way Vista, California 920817830 United States DKates@sonic.net	

STANDARD LARGE GENERATOR INTERCONNECTION AGREEMENT (LGIA) AMONG

THE NEVADA HYDRO COMPANY, INC.
AND

SOUTHERN CALIFORNIA EDISON COMPANY
AND

CALIFORNIA INDEPENDENT SYSTEM OPERATOR CORPORATION

PROJECT: LEAPS TOT132 (Q#72)

TABLE OF CONTENTS

ARTICLE 1. DEFINITIONS 9

ARTICLE 2. EFFECTIVE DATE, TERM AND TERMINATION 17
2.1 Effective Date 17
2.2 Term of Agreement 17
2.3 Termination Procedures 17
2.3.1 Written Notice 17
2.3.2 Default 17
2.3.3 Suspension of Work 17
2.3.4 17
2.4 Termination Costs 17
2.4.1 17
2.4.2 18
2.4.3 18
2.5 Disconnection 18
2.6 Survival 18

ARTICLE 3. REGULATORY FILINGS AND CAISO TARIFF COMPLIANCE 19
3.1 Filing 19
3.2 Agreement Subject to CAISO Tariff 19
3.3 Relationship Between this LGIA and the CAISO Tariff 19
3.4 Relationship Between this LGIA and the QF PGA 19

ARTICLE 4. SCOPE OF SERVICE 19
4.1 Interconnection Service 19
4.2 Provision of Service 20
4.3 Performance Standards 20
4.4 No Transmission Service 20
4.5 Interconnection Customer Provided Services 20

ARTICLE 5. INTERCONNECTION FACILITIES ENGINEERING, PROCUREMENT, AND CONSTRUCTION 20
5.1 Options 20
5.1.1 Standard Option 20
5.1.2 Alternate Option 21
5.1.3 Option to Build 21
5.1.4 Negotiated Option 22
5.2 General Conditions Applicable to Option to Build 22
5.3 Liquidated Damages 24
5.4 Power System Stabilizers 25
5.5 Equipment Procurement 25
5.5.1 25
5.5.2 26

5.5.3 26
5.6 Construction Commencement 26
5.6.1 26
5.6.2 26
5.6.3 26
5.6.4 26
5.7 Work Progress 26
5.8 Information Exchange 26
5.9 Limited Operation 26
5.10 Interconnection Customer's Interconnection Facilities 27
5.10.1 Large Generating Facility and Interconnection Customer's Interconnection Facilities Specifications 27
5.10.2 Participating TO's and CAISO's Review 27
5.10.3 Interconnection Customer's Interconnection Facilities Construction 27
5.10.4 Interconnection Customer to Meet Requirements of the Participating TO's Interconnection Handbook 28
5.11 Participating TO's Interconnection Facilities Construction 28
5.12 Access Rights 29
5.13 Lands of Other Property Owners 29
5.14 Permits 29
5.15 Early Construction of Base Case Facilities 29
5.16 Suspension 30
5.17 Taxes 30
5.17.1 Interconnection Customer Payments Not Taxable 30
5.17.2 Representations and Covenants 30
5.17.3 Indemnification for the Cost Consequences of Current Tax Liability Imposed Upon the Participating TO 31
5.17.4 Tax Gross-Up Amount 32
5.17.5 Private Letter Ruling or Change or Clarification of Law 33
5.17.6 Subsequent Taxable Events 33
5.17.7 Contests 33
5.17.8 Refund 34
5.17.9 Taxes Other Than Income Taxes 36
5.18 Tax Status 36
5.19 Modification 36
5.19.1 General 36
5.19.2 Standards 37
5.19.3 Modification Costs 37

ARTICLE 6. TESTING AND INSPECTION 37
6.1 Pre-Commercial Operation Date Testing and Modifications 37
6.2 Post-Commercial Operation Date Testing and Modifications 38
6.3 Right to Observe Testing 38
6.4 Right to Inspect 38

ARTICLE 7. METERING 38
7.1 General 38
7.2 Check Meters 39
7.3 Participating TO Retail Metering 39

ARTICLE 8. COMMUNICATIONS 39
8.1 Interconnection Customer Obligations 39
8.2 Remote Terminal Unit 39
8.3 No Annexation 40

ARTICLE 9. OPERATIONS 40
9.1 General 40
9.2 Balancing Authority Area Notification 40
9.3 CAISO and Participating TO Obligations 40
9.4 Interconnection Customer Obligations 41
9.5 Start-Up and Synchronization 41
9.6 Reactive Power 41
9.6.1 Power Factor Design Criteria 41
9.6.2 Voltage Schedules 41
9.6.2.1 Governors and Regulators 42
9.6.3 Payment for Reactive Power 43
9.7 Outages and Interruptions 43
9.7.1 Outages 43
9.7.1.1 Outage Authority and Coordination 43
9.7.1.2 Outage Schedules 43
9.7.1.3 Outage Restoration 44
9.7.2 Interruption of Service 44
9.7.2.1 44
9.7.2.2 44
9.7.2.3 44
9.7.2.4 45
9.7.2.5 45
9.7.3 Under-Frequency and Over-Frequency Conditions 45
9.7.4 System Protection and Other Control Requirements 45
9.7.4.1 System Protection Facilities 45
9.7.4.2 46
9.7.4.3 46
9.7.4.4 46
9.7.4.5 46
9.7.4.6 46
9.7.5 Requirements for Protection 46
9.7.6 Power Quality 47
9.8 Switching and Tagging Rules 47
9.9 Use of Interconnection Facilities by Third Parties 47
9.9.1 Purpose of Interconnection Facilities 47
9.9.2 Third Party Users 47

9.10 Disturbance Analysis Data Exchange 48

ARTICLE 10. MAINTENANCE 48
10.1 Participating TO Obligations 48
10.2 Interconnection Customer Obligations 48
10.3 Coordination 48
10.4 Secondary Systems 48
10.5 Operating and Maintenance Expenses 49

ARTICLE 11. PERFORMANCE OBLIGATION 49
11.1 Interconnection Customer's Interconnection Facilities 49
11.2 Participating TO's Interconnection Facilities 49
11.3 Network Upgrades and Distribution Upgrades 49
11.4 Transmission Credits 49
11.4.1 Repayment of Amounts Advanced for Network Upgrades 49
11.4.2 Special Provisions for Affected Systems 50
11.4.3 50
11.5 Provision of Security 51
11.5.1 51
11.5.2 51
11.5.3 51
11.6 Interconnection Customer Compensation 51
11.6.1 Interconnection Customer Compensation for Actions During Emergency Condition 51

ARTICLE 12. INVOICE 52
12.1 General 52
12.2 Final Invoice 52
12.3 Payment 52
12.4 Disputes 53

ARTICLE 13. EMERGENCIES 53
13.1 [Reserved] 53
13.2 Obligations 53
13.3 Notice 53
13.4 Immediate Action 53
13.5 CAISO and Participating TO Authority 54
13.5.1 General 54
13.5.2 Reduction and Disconnection 54
13.6 Interconnection Customer Authority 55
13.7 Limited Liability 55

ARTICLE 14. REGULATORY REQUIREMENTS AND GOVERNING LAWS 55
14.1 Regulatory Requirements 55
14.2 Governing Law 56
14.2.1 56

14.2.2 56
14.2.3 56

ARTICLE 15. NOTICES 56
15.1 General 56
15.2 Billings and Payments 56
15.3 Alternative Forms of Notice 56
15.4 Operations and Maintenance Notice 56

ARTICLE 16. FORCE MAJEURE 57
16.1 Force Majeure 57
16.1.1 57
16.1.2 57

ARTICLE 17. DEFAULT 57
17.1 Default 57
17.1.1 General 57
17.1.2 Right to Terminate 57

ARTICLE 18. INDEMNITY, CONSEQUENTIAL DAMAGES, AND INSURANCE 58
18.1 Indemnity 58
18.1.1 Indemnified Party 58
18.1.2 Indemnifying Party 58
18.1.3 Indemnity Procedures 58
18.2 Consequential Damages 59
18.3 Insurance 59
18.3.1 59
18.3.2 59
18.3.3 60
18.3.4 60
18.3.5 60
18.3.6 60
18.3.7 60
18.3.8 61
18.3.9 61
18.3.10 61
18.3.11 61

ARTICLE 19. ASSIGNMENT 61
19.1 Assignment 61

ARTICLE 20. SEVERABILITY 62
20.1 Severability 62

ARTICLE 21. COMPARABILITY 62
21.1 Comparability 62

ARTICLE 22. CONFIDENTIALITY 62
22.1 Confidentiality 62
22.1.1 Term 63
22.1.2 Scope 63
22.1.3 Release of Confidential Information 63
22.1.4 Rights 64
22.1.5 No Warranties 64
22.1.6 Standard of Care 64
22.1.7 Order of Disclosure 64
22.1.8 Termination of Agreement 64
22.1.9 Remedies 64
22.1.10 Disclosure to FERC, its Staff, or a State 65
22.1.11 65

ARTICLE 23. ENVIRONMENTAL RELEASES 66
23.1 66

ARTICLE 24. INFORMATION REQUIREMENTS 66
24.1 Information Acquisition 66
24.2 Information Submission by Participating TO 66
24.3 Updated Information Submission by Interconnection Customer 66
24.4 Information Supplementation 67

ARTICLE 25. INFORMATION ACCESS AND AUDIT RIGHTS 68
25.1 Information Access 68
25.2 Reporting of Non-Force Majeure Events 68
25.3 Audit Rights 68
25.3.1 68
25.3.2 69
25.4 Audit Rights Periods 69
25.4.1 Audit Rights Period for Construction-Related Accounts and Records 69
25.4.2 Audit Rights Period for All Other Accounts and Records 69
25.5 Audit Results 69
25.5.1 70

ARTICLE 26. SUBCONTRACTORS 70
26.1 General 70
26.2 Responsibility of Principal 70
26.3 No Limitation by Insurance 70

ARTICLE 27. DISPUTES 70
27.1 Submission 70
27.2 External Arbitration Procedures 71

27.3 Arbitration Decisions 71
27.4 Costs 71

ARTICLE 28. REPRESENTATIONS, WARRANTIES AND COVENANTS 72
28.1 General 72
28.1.1 Good Standing 72
28.1.2 Authority 72
28.1.3 No Conflict 72
28.1.4 Consent and Approval 72

ARTICLE 29. [RESERVED] 72

ARTICLE 30. MISCELLANEOUS 73
30.1 Binding Effect 73
30.2 Conflicts 73
30.3 Rules of Interpretation 73
30.4 Entire Agreement 73
30.5 No Third Party Beneficiaries 74
30.6 Waiver 74
30.7 Headings 74
30.8 Multiple Counterparts 74
30.9 Amendment 74
30.10 Modification by the Parties 74
30.11 Reservation of Rights 74
30.12 No Partnership 75
30.13 Joint and Several Obligations 76

Appendices 77

Appendix A Interconnection Facilities, Network Upgrades and Distribution Upgrades

Appendix B Milestones

Appendix C Interconnection Details

Appendix D Security Arrangements Details

Appendix E Commercial Operation Date

Appendix F Addresses for Delivery of Notices and Billings

Appendix G [Not Used]

Appendix H Interconnection Requirements for an Asynchronous Generating Facility

STANDARD LARGE GENERATOR INTERCONNECTION AGREEMENT

THE NEVADA HYDRO COMPANY, INC.

SOUTHERN CALIFORNIA EDISON COMPANY

CALIFORNIA INDEPENDENT SYSTEM OPERATOR CORPORATION

THIS STANDARD LARGE GENERATOR INTERCONNECTION AGREEMENT ("LGIA") is made and entered into this _____ day of _____ 2012, by and among The Nevada Hydro Company, Inc., a corporation organized and existing under the laws of the State/Commonwealth of California ("**Interconnection Customer**" with a Large Generating Facility), Southern California Edison Company, a corporation organized and existing under the laws of the State of California ("**Participating TO**"), and California Independent System Operator Corporation, a California nonprofit public benefit corporation organized and existing under the laws of the State of California ("**CAISO**"). Interconnection Customer, Participating TO, and CAISO each may be referred to as a "Party" or collectively as the "Parties."

RECITALS

WHEREAS, CAISO exercises Operational Control over the CAISO Controlled Grid; and

WHEREAS, the Participating TO owns, operates, and maintains the Participating TO's Transmission System; and

WHEREAS, Interconnection Customer intends to own, lease and/or control and operate the Generating Facility identified as a Large Generating Facility in Appendix C to this LGIA; and

WHEREAS, Interconnection Customer, Participating TO, and CAISO have agreed to enter into this LGIA for the purpose of interconnecting the Large Generating Facility with the Participating TO's Transmission System;

NOW, THEREFORE, in consideration of and subject to the mutual covenants contained herein, it is agreed:

When used in this LGIA, terms with initial capitalization that are not defined in Article 1 shall have the meanings specified in the Article in which they are used.

ARTICLE 1. DEFINITIONS

Adverse System Impact shall mean the negative effects due to technical or operational limits on conductors or equipment being exceeded that may compromise the safety and reliability of the electric system.

Affected System shall mean an electric system other than the CAISO Controlled Grid that may be affected by the proposed interconnection, including the Participating TO's electric system that is not part of the CAISO Controlled Grid.

Affiliate shall mean, with respect to a corporation, partnership or other entity, each such other corporation, partnership or other entity that directly or indirectly, through one or more intermediaries, controls, is controlled by, or is under common control with, such corporation, partnership or other entity.

Applicable Laws and Regulations shall mean all duly promulgated applicable federal, state and local laws, regulations, rules, ordinances, codes, decrees, judgments, directives, or judicial or administrative orders, permits and other duly authorized actions of any Governmental Authority.

Applicable Reliability Council shall mean the Western Electricity Coordinating Council or its successor.

Applicable Reliability Standards shall mean the requirements and guidelines of NERC, the Applicable Reliability Council, and the Balancing Authority Area of the Participating TO's Transmission System to which the Generating Facility is directly connected, including requirements adopted pursuant to Section 215 of the Federal Power Act.

Asynchronous Generating Facility shall mean an induction, doubly-fed, or electronic power generating unit(s) that produces 60 Hz (nominal) alternating current.

Balancing Authority shall mean the responsible entity that integrates resource plans ahead of time, maintains load-interchange-generation balance within a Balancing Authority Area, and supports Interconnection frequency in real time.

Balancing Authority Area shall mean the collection of generation, transmission, and loads within the metered boundaries of the Balancing Authority. The Balancing Authority maintains load-resource balance within this area.

Base Case shall mean the base case power flow, short circuit, and stability data bases used for the Interconnection Studies.

Breach shall mean the failure of a Party to perform or observe any material term or condition of this LGIA.

Breaching Party shall mean a Party that is in Breach of this LGIA.

Business Day shall mean Monday through Friday, excluding federal holidays and the day after Thanksgiving Day.

Calendar Day shall mean any day including Saturday, Sunday or a federal holiday.

Commercial Operation shall mean the status of an Electric Generating Unit at a Generating Facility that has commenced generating electricity for sale, excluding electricity generated during Trial Operation.

Commercial Operation Date of an Electric Generating Unit shall mean the date on which the Electric Generating Unit at the Generating Facility commences Commercial Operation as agreed to by the applicable Participating TO and the Interconnection Customer pursuant to Appendix E to this LGIA.

Confidential Information shall mean any confidential, proprietary or trade secret information of a plan, specification, pattern, procedure, design, device, list, concept, policy or compilation relating to the present or planned business of a Party, which is designated as confidential by the Party supplying the information, whether conveyed orally, electronically, in writing, through inspection, or otherwise, subject to Article 22.1.2.

Default shall mean the failure of a Breaching Party to cure its Breach in accordance with Article 17 of this LGIA.

Distribution System shall mean those non-CAISO-controlled transmission and distribution facilities owned by the Participating TO.

Distribution Upgrades shall mean the additions, modifications, and upgrades to the Participating TO's Distribution System. Distribution Upgrades do not include Interconnection Facilities.

Effective Date shall mean the date on which this LGIA becomes effective upon execution by the Parties subject to acceptance by FERC, or if filed unexecuted, upon the date specified by FERC.

Electric Generating Unit shall mean an individual electric generator and its associated plant and apparatus whose electrical output is capable of being separately identified and metered.

Emergency Condition shall mean a condition or situation: (1) that in the judgment of the Party making the claim is imminently likely to endanger life or property; or (2) that, in the case of the CAISO, is imminently likely (as determined in a non-

discriminatory manner) to cause a material adverse effect on the security of, or damage to, the CAISO Controlled Grid or the electric systems of others to which the CAISO Controlled Grid is directly connected; (3) that, in the case of the Participating TO, is imminently likely (as determined in a non-discriminatory manner) to cause a material adverse effect on the security of, or damage to, the Participating TO's Transmission System, Participating TO's Interconnection Facilities, Distribution System, or the electric systems of others to which the Participating TO's electric system is directly connected; or (4) that, in the case of the Interconnection Customer, is imminently likely (as determined in a non-discriminatory manner) to cause a material adverse effect on the security of, or damage to, the Generating Facility or Interconnection Customer's Interconnection Facilities. System restoration and black start shall be considered Emergency Conditions; provided, that Interconnection Customer is not obligated by this LGIA to possess black start capability.

Environmental Law shall mean Applicable Laws or Regulations relating to pollution or protection of the environment or natural resources.

Federal Power Act shall mean the Federal Power Act, as amended, 16 U.S.C. §§ 791a *et seq*.

FERC shall mean the Federal Energy Regulatory Commission or its successor.

Force Majeure shall mean any act of God, labor disturbance, act of the public enemy, war, insurrection, riot, fire, storm or flood, explosion, breakage or accident to machinery or equipment, any order, regulation or restriction imposed by governmental, military or lawfully established civilian authorities, or any other cause beyond a Party's control. A Force Majeure event does not include acts of negligence or intentional wrongdoing by the Party claiming Force Majeure.

Generating Facility shall mean the Interconnection Customer's Electric Generating Unit(s) used for the production of electricity identified in the Interconnection Customer's Interconnection Request, but shall not include the Interconnection Customer's Interconnection Facilities.

Generating Facility Capacity shall mean the net capacity of the Generating Facility and the aggregate net capacity of the Generating Facility where it includes multiple energy production devices.

Good Utility Practice shall mean any of the practices, methods and acts engaged in or approved by a significant portion of the electric utility industry during the relevant time period, or any of the practices, methods and acts which, in the exercise of reasonable judgment in light of the facts known at the time the decision was made, could have been expected to accomplish the desired result at a reasonable cost consistent with good business practices, reliability, safety and expedition. Good Utility Practice is not intended to be any one of a number of the optimum practices, methods, or acts to the exclusion of all others, but rather to be acceptable practices, methods, or

acts generally accepted in the region.

Governmental Authority shall mean any federal, state, local or other governmental, regulatory or administrative agency, court, commission, department, board, or other governmental subdivision, legislature, rulemaking board, tribunal, or other governmental authority having jurisdiction over the Parties, their respective facilities, or the respective services they provide, and exercising or entitled to exercise any administrative, executive, police, or taxing authority or power; provided, however, that such term does not include the Interconnection Customer, CAISO, Participating TO, or any Affiliate thereof.

Hazardous Substances shall mean any chemicals, materials or substances defined as or included in the definition of "hazardous substances," "hazardous wastes," "hazardous materials," "hazardous constituents," "restricted hazardous materials," "extremely hazardous substances," "toxic substances," "radioactive substances," "contaminants," "pollutants," "toxic pollutants" or words of similar meaning and regulatory effect under any applicable Environmental Law, or any other chemical, material or substance, exposure to which is prohibited, limited or regulated by any applicable Environmental Law.

Initial Synchronization Date shall mean the date upon which an Electric Generating Unit is initially synchronized and upon which Trial Operation begins.

In-Service Date shall mean the date upon which the Interconnection Customer reasonably expects it will be ready to begin use of the Participating TO's Interconnection Facilities to obtain back feed power.

Interconnection Customer's Interconnection Facilities shall mean all facilities and equipment, as identified in Appendix A of this LGIA, that are located between the Generating Facility and the Point of Change of Ownership, including any modification, addition, or upgrades to such facilities and equipment necessary to physically and electrically interconnect the Generating Facility to the Participating TO's Transmission System. Interconnection Customer's Interconnection Facilities are sole use facilities.

Interconnection Facilities shall mean the Participating TO's Interconnection Facilities and the Interconnection Customer's Interconnection Facilities. Collectively, Interconnection Facilities include all facilities and equipment between the Generating Facility and the Point of Interconnection, including any modification, additions or upgrades that are necessary to physically and electrically interconnect the Generating Facility to the Participating TO's Transmission System. Interconnection Facilities are sole use facilities and shall not include Distribution Upgrades, Stand Alone Network Upgrades or Network Upgrades.

Interconnection Facilities Study shall mean the study conducted or caused to be performed by the CAISO, in coordination with the applicable Participating TO(s), or a third party consultant for the Interconnection Customer to determine a list of facilities

(including the Participating TO's Interconnection Facilities, Network Upgrades, and Distribution Upgrades), the cost of those facilities, and the time required to interconnect the Generating Facility with the Participating TO's Transmission System.

Interconnection Facilities Study Agreement shall mean the agreement between the Interconnection Customer and the CAISO for conducting the Interconnection Facilities Study.

Interconnection Feasibility Study shall mean the preliminary evaluation conducted or caused to be performed by the CAISO, in coordination with the applicable Participating TO(s), or a third party consultant for the Interconnection Customer of the system impact and cost of interconnecting the Generating Facility to the Participating TO's Transmission System.

Interconnection Handbook shall mean a handbook, developed by the Participating TO and posted on the Participating TO's web site or otherwise made available by the Participating TO, describing technical and operational requirements for wholesale generators and loads connected to the Participating TO's portion of the CAISO Controlled Grid, as such handbook may be modified or superseded from time to time. Participating TO's standards contained in the Interconnection Handbook shall be deemed consistent with Good Utility Practice and Applicable Reliability Standards. In the event of a conflict between the terms of this LGIA and the terms of the Participating TO's Interconnection Handbook, the terms in this LGIA shall apply.

Interconnection Request shall mean a request, in the form of Appendix 1 to the Standard Large Generator Interconnection Procedures, in accordance with the CAISO Tariff.

Interconnection Service shall mean the service provided by the Participating TO and CAISO associated with interconnecting the Interconnection Customer's Generating Facility to the Participating TO's Transmission System and enabling the CAISO Controlled Grid to receive electric energy and capacity from the Generating Facility at the Point of Interconnection, pursuant to the terms of this LGIA, the Participating TO's Transmission Owner Tariff, and the CAISO Tariff.

Interconnection Study shall mean any of the following studies: the Interconnection Feasibility Study, the Interconnection System Impact Study, and the Interconnection Facilities Study conducted or caused to be performed by the CAISO, in coordination with the applicable Participating TO(s), or a third party consultant for the Interconnection Customer pursuant to the Standard Large Generator Interconnection Procedures.

Interconnection System Impact Study shall mean the engineering study conducted or caused to be performed by the CAISO, in coordination with the applicable Participating TO(s), or a third party consultant for the Interconnection Customer that evaluates the impact of the proposed interconnection on the safety and reliability of the

Participating TO's Transmission System and, if applicable, an Affected System. The study shall identify and detail the system impacts that would result if the Generating Facility were interconnected without project modifications or system modifications, focusing on the Adverse System Impacts identified in the Interconnection Feasibility Study, or to study potential impacts, including but not limited to those identified in the Scoping Meeting as described in the Standard Large Generator Interconnection Procedures.

IRS shall mean the Internal Revenue Service.

CAISO Controlled Grid shall mean the system of transmission lines and associated facilities of the parties to the Transmission Control Agreement that have been placed under the CAISO's Operational Control.

CAISO Tariff shall mean the CAISO's tariff, as filed with FERC, and as amended or supplemented from time to time, or any successor tariff.

Large Generating Facility shall mean a Generating Facility having a Generating Facility Capacity of more than 20 MW.

Loss shall mean any and all damages, losses, and claims, including claims and actions relating to injury to or death of any person or damage to property, demand, suits, recoveries, costs and expenses, court costs, attorney fees, and all other obligations by or to third parties.

Material Modification shall mean those modifications that have a material impact on the cost or timing of any Interconnection Request or any other valid interconnection request with a later queue priority date.

Metering Equipment shall mean all metering equipment installed or to be installed for measuring the output of the Generating Facility pursuant to this LGIA at the metering points, including but not limited to instrument transformers, MWh-meters, data acquisition equipment, transducers, remote terminal unit, communications equipment, phone lines, and fiber optics.

NERC shall mean the North American Electric Reliability Corporation or its successor organization.

Network Upgrades shall be Participating TO's Delivery Network Upgrades and Participating TO's Reliability Network Upgrades.

Operational Control shall mean the rights of the CAISO under the Transmission Control Agreement and the CAISO Tariff to direct the parties to the Transmission Control Agreement how to operate their transmission lines and facilities and other electric plant affecting the reliability of those lines and facilities for the purpose of affording comparable non-discriminatory transmission access and meeting applicable

reliability criteria.

Participating TO's Delivery Network Upgrades shall mean the additions, modifications, and upgrades to the Participating TO's Transmission System at or beyond the Point of Interconnection, other than Reliability Network Upgrades, identified in the Interconnection Studies, as identified in Appendix A, to relieve constraints on the CAISO Controlled Grid.

Participating TO's Interconnection Facilities shall mean all facilities and equipment owned, controlled or operated by the Participating TO from the Point of Change of Ownership to the Point of Interconnection as identified in Appendix A to this LGIA, including any modifications, additions or upgrades to such facilities and equipment. Participating TO's Interconnection Facilities are sole use facilities and shall not include Distribution Upgrades, Stand Alone Network Upgrades or Network Upgrades.

Participating TO's Reliability Network Upgrades shall mean the additions, modifications, and upgrades to the Participating TO's Transmission System at or beyond the Point of Interconnection, identified in the Interconnection Studies, as identified in Appendix A, necessary to interconnect the Large Generating Facility safely and reliably to the Participating TO's Transmission System, which would not have been necessary but for the interconnection of the Large Generating Facility, including additions, modifications, and upgrades necessary to remedy short circuit or stability problems resulting from the interconnection of the Large Generating Facility to the Participating TO's Transmission System. Participating TO's Reliability Network Upgrades also include, consistent with Applicable Reliability Council practice, the Participating TO's facilities necessary to mitigate any adverse impact the Large Generating Facility's interconnection may have on a path's Applicable Reliability Council rating.

Participating TO's Transmission System shall mean the facilities owned and operated by the Participating TO and that have been placed under the CAISO's Operational Control, which facilities form part of the CAISO Controlled Grid.

Party or Parties shall mean the Participating TO, CAISO, Interconnection Customer or the applicable combination of the above.

Point of Change of Ownership shall mean the point, as set forth in Appendix A to this LGIA, where the Interconnection Customer's Interconnection Facilities connect to the Participating TO's Interconnection Facilities.

Point of Interconnection shall mean the point, as set forth in Appendix A to this LGIA, where the Interconnection Facilities connect to the Participating TO's Transmission System.

Qualifying Facility shall mean a qualifying cogeneration facility or qualifying small

power production facility, as defined in the Code of Federal Regulations, Title 18, Part 292 (18 C.F.R. §292).

QF PGA shall mean a Qualifying Facility Participating Generator Agreement specifying the special provisions for the operating relationship between a Qualifying Facility and the CAISO, a pro forma version of which is set forth in Appendix B.3 of the CAISO Tariff.

Reasonable Efforts shall mean, with respect to an action required to be attempted or taken by a Party under this LGIA, efforts that are timely and consistent with Good Utility Practice and are otherwise substantially equivalent to those a Party would use to protect its own interests.

Scoping Meeting shall mean the meeting among representatives of the Interconnection Customer, the Participating TO(s), other Affected Systems, and the CAISO conducted for the purpose of discussing alternative interconnection options, to exchange information including any transmission data and earlier study evaluations that would be reasonably expected to impact such interconnection options, to analyze such information, and to determine the potential feasible Points of Interconnection.

Stand Alone Network Upgrades shall mean Network Upgrades that the Interconnection Customer may construct without affecting day-to-day operations of the CAISO Controlled Grid or Affected Systems during their construction. The Participating TO, the CAISO, and the Interconnection Customer must agree as to what constitutes Stand Alone Network Upgrades and identify them in Appendix A to this LGIA.

Standard Large Generator Interconnection Procedures (LGIP) shall mean the CAISO protocol that sets forth the interconnection procedures applicable to an Interconnection Request pertaining to a Large Generating Facility that is included in CAISO Tariff Appendix U.

System Protection Facilities shall mean the equipment, including necessary protection signal communications equipment, that protects (1) the Participating TO's Transmission System, Participating TO's Interconnection Facilities, CAISO Controlled Grid, and Affected Systems from faults or other electrical disturbances occurring at the Generating Facility and (2) the Generating Facility from faults or other electrical system disturbances occurring on the CAISO Controlled Grid, Participating TO's Interconnection Facilities, and Affected Systems or on other delivery systems or other generating systems to which the CAISO Controlled Grid is directly connected.

Transmission Control Agreement shall mean CAISO FERC Electric Tariff No. 7.

Trial Operation shall mean the period during which the Interconnection Customer is engaged in on-site test operations and commissioning of an Electric Generating Unit prior to Commercial Operation.

ARTICLE 2. EFFECTIVE DATE, TERM AND TERMINATION

2.1 Effective Date. This LGIA shall become effective upon execution by the Parties subject to acceptance by FERC (if applicable), or if filed unexecuted, upon the date specified by FERC. The CAISO and Participating TO shall promptly file this LGIA with FERC upon execution in accordance with Article 3.1, if required.

2.2 Term of Agreement. Subject to the provisions of Article 2.3, this LGIA shall remain in effect for a period of fifty (50) years from the Effective Date and shall be automatically renewed for each successive one-year period thereafter.

2.3 Termination Procedures.

2.3.1 Written Notice. This LGIA may be terminated by the Interconnection Customer after giving the CAISO and the Participating TO ninety (90) Calendar Days advance written notice, or by the CAISO and the Participating TO notifying FERC after the Generating Facility permanently ceases Commercial Operation.

2.3.2 Default. A Party may terminate this LGIA in accordance with Article 17.

2.3.3 Suspension of Work. This LGIA may be deemed terminated in accordance with Article 5.16.

2.3.4 Notwithstanding Articles 2.3.1, 2.3.2, and 2.3.3, no termination shall become effective until the Parties have complied with all Applicable Laws and Regulations applicable to such termination, including the filing with FERC of a notice of termination of this LGIA, which notice has been accepted for filing by FERC.

2.4 Termination Costs. If this LGIA terminates pursuant to Article 2.3 above, the Interconnection Customer shall pay all costs incurred or irrevocably committed to be incurred in association with the Interconnection Customer's interconnection (including any cancellation costs relating to orders or contracts for Interconnection Facilities and equipment) and other expenses, including any Network Upgrades and Distribution Upgrades for which the Participating TO or CAISO has incurred expenses or has irrevocably committed to incur expenses and has not been reimbursed by the Interconnection Customer, as of the date of the other Parties' receipt of the notice of termination, subject to the limitations set forth in this Article 2.4. Nothing in this Article 2.4 shall limit the Parties' rights under Article 17.

2.4.1 Notwithstanding the foregoing, in the event of termination by a Party, all Parties shall use commercially Reasonable Efforts to mitigate the costs,

damages and charges arising as a consequence of termination. With respect to any portion of the Participating TO's Interconnection Facilities that have not yet been constructed or installed, the Participating TO shall to the extent possible and with the Interconnection Customer's authorization cancel any pending orders of, or return, any materials or equipment for, or contracts for construction of, such facilities; provided that in the event the Interconnection Customer elects not to authorize such cancellation, the Interconnection Customer shall assume all payment obligations with respect to such materials, equipment, and contracts, and the Participating TO shall deliver such material and equipment, and, if necessary, assign such contracts, to the Interconnection Customer as soon as practicable, at the Interconnection Customer's expense. To the extent that the Interconnection Customer has already paid the Participating TO for any or all such costs of materials or equipment not taken by the Interconnection Customer, the Participating TO shall promptly refund such amounts to the Interconnection Customer, less any costs, including penalties, incurred by the Participating TO to cancel any pending orders of or return such materials, equipment, or contracts.

2.4.2 The Participating TO may, at its option, retain any portion of such materials, equipment, or facilities that the Interconnection Customer chooses not to accept delivery of, in which case the Participating TO shall be responsible for all costs associated with procuring such materials, equipment, or facilities.

2.4.3 With respect to any portion of the Interconnection Facilities, and any other facilities already installed or constructed pursuant to the terms of this LGIA, Interconnection Customer shall be responsible for all costs associated with the removal, relocation or other disposition or retirement of such materials, equipment, or facilities.

2.5 Disconnection. Upon termination of this LGIA, the Parties will take all appropriate steps to disconnect the Large Generating Facility from the Participating TO's Transmission System. All costs required to effectuate such disconnection shall be borne by the terminating Party, unless such termination resulted from the non-terminating Party's Default of this LGIA or such non-terminating Party otherwise is responsible for these costs under this LGIA.

2.6 Survival. This LGIA shall continue in effect after termination to the extent necessary to provide for final billings and payments and for costs incurred hereunder, including billings and payments pursuant to this LGIA; to permit the determination and enforcement of liability and indemnification obligations arising from acts or events that occurred while this LGIA was in effect; and to permit each Party to have access to the lands of the other Parties pursuant to this LGIA or other applicable agreements, to disconnect, remove or salvage its own facilities and equipment.

ARTICLE 3. REGULATORY FILINGS AND CAISO TARIFF COMPLIANCE

3.1 **Filing**. The Participating TO and the CAISO shall file this LGIA (and any amendment hereto) with the appropriate Governmental Authority(ies), if required. The Interconnection Customer may request that any information so provided be subject to the confidentiality provisions of Article 22. If the Interconnection Customer has executed this LGIA, or any amendment thereto, the Interconnection Customer shall reasonably cooperate with the Participating TO and CAISO with respect to such filing and to provide any information reasonably requested by the Participating TO or CAISO needed to comply with applicable regulatory requirements.

3.2 **Agreement Subject to CAISO Tariff**. The Interconnection Customer will comply with all applicable provisions of the CAISO Tariff, including the LGIP.

3.3 **Relationship Between this LGIA and the CAISO Tariff.** With regard to rights and obligations between the Participating TO and the Interconnection Customer, if and to the extent a matter is specifically addressed by a provision of this LGIA (including any appendices, schedules or other attachments to this LGIA), the provisions of this LGIA shall govern. If and to the extent a provision of this LGIA is inconsistent with the CAISO Tariff and dictates rights and obligations between the CAISO and the Participating TO or the CAISO and the Interconnection Customer, the CAISO Tariff shall govern.

3.4 **Relationship Between this LGIA and the QF PGA.** With regard to the rights and obligations of a Qualifying Facility that has entered into a QF PGA with the CAISO and has entered into this LGIA, if and to the extent a matter is specifically addressed by a provision of the QF PGA that is inconsistent with this LGIA, the terms of the QF PGA shall govern.

ARTICLE 4. SCOPE OF SERVICE

4.1 **Interconnection Service.** Interconnection Service allows the Interconnection Customer to connect the Large Generating Facility to the Participating TO's Transmission System and be eligible to deliver the Large Generating Facility's output using the available capacity of the CAISO Controlled Grid. To the extent the Interconnection Customer wants to receive Interconnection Service, the Participating TO shall construct facilities identified in Appendices A and C that the Participating TO is responsible to construct.

Interconnection Service does not necessarily provide the Interconnection Customer with the capability to physically deliver the output of its Large Generating Facility to any particular load on the CAISO Controlled Grid without

incurring congestion costs. In the event of transmission constraints on the CAISO Controlled Grid, the Interconnection Customer's Large Generating Facility shall be subject to the applicable congestion management procedures in the CAISO Tariff in the same manner as all other resources.

4.2 Provision of Service. The Participating TO and the CAISO shall provide Interconnection Service for the Large Generating Facility.

4.3 Performance Standards. Each Party shall perform all of its obligations under this LGIA in accordance with Applicable Laws and Regulations, Applicable Reliability Standards, and Good Utility Practice, and to the extent a Party is required or prevented or limited in taking any action by such regulations and standards, such Party shall not be deemed to be in Breach of this LGIA for its compliance therewith. If such Party is the CAISO or Participating TO, then that Party shall amend the LGIA and submit the amendment to FERC for approval.

4.4 No Transmission Service. The execution of this LGIA does not constitute a request for, nor the provision of, any transmission service under the CAISO Tariff, and does not convey any right to deliver electricity to any specific customer or point of delivery.

4.5 Interconnection Customer Provided Services. The services provided by Interconnection Customer under this LGIA are set forth in Article 9.6 and Article 13.5.1. Interconnection Customer shall be paid for such services in accordance with Article 11.6.

ARTICLE 5. INTERCONNECTION FACILITIES ENGINEERING, PROCUREMENT, AND CONSTRUCTION

Interconnection Facilities, Network Upgrades, and Distribution Upgrades shall be studied, designed, and constructed pursuant to Good Utility Practice. Such studies, design and construction shall be based on the assumed accuracy and completeness of all technical information received by the Participating TO and the CAISO from the Interconnection Customer associated with interconnecting the Large Generating Facility.

5.1 Options. Unless otherwise mutually agreed among the Parties, the Interconnection Customer shall select the In-Service Date, Initial Synchronization Date, and Commercial Operation Date; and either Standard Option or Alternate Option set forth below for completion of the Participating TO's Interconnection Facilities and Network Upgrades as set forth in Appendix A, Interconnection Facilities, Network Upgrades, and Distribution Upgrades, and such dates and selected option shall be set forth in Appendix B, Milestones.

5.1.1 Standard Option. The Participating TO shall design, procure, and

construct the Participating TO's Interconnection Facilities, Network Upgrades, and Distribution Upgrades, using Reasonable Efforts to complete the Participating TO's Interconnection Facilities, Network Upgrades, and Distribution Upgrades by the dates set forth in Appendix B, Milestones. The Participating TO shall not be required to undertake any action which is inconsistent with its standard safety practices, its material and equipment specifications, its design criteria and construction procedures, its labor agreements, and Applicable Laws and Regulations. In the event the Participating TO reasonably expects that it will not be able to complete the Participating TO's Interconnection Facilities, Network Upgrades, and Distribution Upgrades by the specified dates, the Participating TO shall promptly provide written notice to the Interconnection Customer and the CAISO and shall undertake Reasonable Efforts to meet the earliest dates thereafter.

5.1.2 Alternate Option. If the dates designated by the Interconnection Customer are acceptable to the Participating TO, the Participating TO shall so notify the Interconnection Customer within thirty (30) Calendar Days, and shall assume responsibility for the design, procurement and construction of the Participating TO's Interconnection Facilities by the designated dates.

If the Participating TO subsequently fails to complete the Participating TO's Interconnection Facilities by the In-Service Date, to the extent necessary to provide back feed power; or fails to complete Network Upgrades by the Initial Synchronization Date to the extent necessary to allow for Trial Operation at full power output, unless other arrangements are made by the Parties for such Trial Operation; or fails to complete the Network Upgrades by the Commercial Operation Date, as such dates are reflected in Appendix B, Milestones; the Participating TO shall pay the Interconnection Customer liquidated damages in accordance with Article 5.3, Liquidated Damages, provided, however, the dates designated by the Interconnection Customer shall be extended day for day for each day that the CAISO refuses to grant clearances to install equipment.

5.1.3 Option to Build. If the dates designated by the Interconnection Customer are not acceptable to the Participating TO, the Participating TO shall so notify the Interconnection Customer within thirty (30) Calendar Days, and unless the Parties agree otherwise, the Interconnection Customer shall have the option to assume responsibility for the design, procurement and construction of the Participating TO's Interconnection Facilities and Stand Alone Network Upgrades. If the Interconnection Customer elects to exercise its option to assume responsibility for the design, procurement and construction of the Participating TO's Interconnection Facilities and Stand Alone Network Upgrades, it shall so notify the Participating TO within thirty (30) Calendar Days of receipt of the Participating TO's

notification that the designated dates are not acceptable to the Participating TO. The Participating TO, CAISO, and Interconnection Customer must agree as to what constitutes Stand Alone Network Upgrades and identify such Stand Alone Network Upgrades in Appendix A to this LGIA. Except for Stand Alone Network Upgrades, the Interconnection Customer shall have no right to construct Network Upgrades under this option.

5.1.4 Negotiated Option. If the Interconnection Customer elects not to exercise its option under Article 5.1.3, Option to Build, the Interconnection Customer shall so notify the Participating TO within thirty (30) Calendar Days of receipt of the Participating TO's notification that the designated dates are not acceptable to the Participating TO, and the Parties shall in good faith attempt to negotiate terms and conditions (including revision of the specified dates and liquidated damages, the provision of incentives or the procurement and construction of a portion of the Participating TO's Interconnection Facilities and Stand Alone Network Upgrades by the Interconnection Customer) pursuant to which the Participating TO is responsible for the design, procurement and construction of the Participating TO's Interconnection Facilities and Network Upgrades. If the Parties are unable to reach agreement on such terms and conditions, the Participating TO shall assume responsibility for the design, procurement and construction of the Participating TO's Interconnection Facilities and Network Upgrades pursuant to Article 5.1.1, Standard Option.

5.2 General Conditions Applicable to Option to Build. If the Interconnection Customer assumes responsibility for the design, procurement and construction of the Participating TO's Interconnection Facilities and Stand Alone Network Upgrades,

(1) the Interconnection Customer shall engineer, procure equipment, and construct the Participating TO's Interconnection Facilities and Stand Alone Network Upgrades (or portions thereof) using Good Utility Practice and using standards and specifications provided in advance by the Participating TO;

(2) the Interconnection Customer's engineering, procurement and construction of the Participating TO's Interconnection Facilities and Stand Alone Network Upgrades shall comply with all requirements of law to which the Participating TO would be subject in the engineering, procurement or construction of the Participating TO's Interconnection Facilities and Stand Alone Network Upgrades;

(3) the Participating TO shall review, and the Interconnection Customer shall obtain the Participating TO's approval of, the engineering design, equipment acceptance tests, and the construction of the Participating TO's

Interconnection Facilities and Stand Alone Network Upgrades, which approval shall not be unreasonably withheld, and the CAISO may, at its option, review the engineering design, equipment acceptance tests, and the construction of the Participating TO's Interconnection Facilities and Stand Alone Network Upgrades;

(4) prior to commencement of construction, the Interconnection Customer shall provide to the Participating TO, with a copy to the CAISO for informational purposes, a schedule for construction of the Participating TO's Interconnection Facilities and Stand Alone Network Upgrades, and shall promptly respond to requests for information from the Participating TO;

(5) at any time during construction, the Participating TO shall have the right to gain unrestricted access to the Participating TO's Interconnection Facilities and Stand Alone Network Upgrades and to conduct inspections of the same;

(6) at any time during construction, should any phase of the engineering, equipment procurement, or construction of the Participating TO's Interconnection Facilities and Stand Alone Network Upgrades not meet the standards and specifications provided by the Participating TO, the Interconnection Customer shall be obligated to remedy deficiencies in that portion of the Participating TO's Interconnection Facilities and Stand Alone Network Upgrades;

(7) the Interconnection Customer shall indemnify the CAISO and Participating TO for claims arising from the Interconnection Customer's construction of the Participating TO's Interconnection Facilities and Stand Alone Network Upgrades under the terms and procedures applicable to Article 18.1 Indemnity;

(8) the Interconnection Customer shall transfer control of the Participating TO's Interconnection Facilities to the Participating TO and shall transfer Operational Control of Stand Alone Network Upgrades to the CAISO;

(9) unless the Parties otherwise agree, the Interconnection Customer shall transfer ownership of the Participating TO's Interconnection Facilities and Stand Alone Network Upgrades to the Participating TO. As soon as reasonably practicable, but within twelve months after completion of the construction of the Participating TO’s Interconnection Facilities and Stand Alone Network Upgrades, the Interconnection Customer shall provide an invoice of the final cost of the construction of the Participating TO’s Interconnection Facilities and Stand Alone Network Upgrades to the Participating TO, which invoice shall set forth such costs in sufficient detail to enable the Participating TO to reflect the proper costs of such facilities

in its transmission rate base and to identify the investment upon which refunds will be provided;

(10) the Participating TO shall accept for operation and maintenance the Participating TO's Interconnection Facilities and Stand Alone Network Upgrades to the extent engineered, procured, and constructed in accordance with this Article 5.2; and

(11) the Interconnection Customer's engineering, procurement and construction of the Participating TO's Interconnection Facilities and Stand Alone Network Upgrades shall comply with all requirements of the "Option to Build" conditions set forth in Appendix C. Interconnection Customer shall deliver to the Participating TO "as-built" drawings, information, and any other documents that are reasonably required by the Participating TO to assure that the Interconnection Facilities and Stand-Alone Network Upgrades are built to the standards and specifications required by the Participating TO.

5.3 Liquidated Damages. The actual damages to the Interconnection Customer, in the event the Participating TO's Interconnection Facilities or Network Upgrades are not completed by the dates designated by the Interconnection Customer and accepted by the Participating TO pursuant to subparagraphs 5.1.2 or 5.1.4, above, may include Interconnection Customer's fixed operation and maintenance costs and lost opportunity costs. Such actual damages are uncertain and impossible to determine at this time. Because of such uncertainty, any liquidated damages paid by the Participating TO to the Interconnection Customer in the event that the Participating TO does not complete any portion of the Participating TO's Interconnection Facilities or Network Upgrades by the applicable dates, shall be an amount equal to ½ of 1 percent per day of the actual cost of the Participating TO's Interconnection Facilities and Network Upgrades, in the aggregate, for which the Participating TO has assumed responsibility to design, procure and construct.

However, in no event shall the total liquidated damages exceed 20 percent of the actual cost of the Participating TO's Interconnection Facilities and Network Upgrades for which the Participating TO has assumed responsibility to design, procure, and construct. The foregoing payments will be made by the Participating TO to the Interconnection Customer as just compensation for the damages caused to the Interconnection Customer, which actual damages are uncertain and impossible to determine at this time, and as reasonable liquidated damages, but not as a penalty or a method to secure performance of this LGIA. Liquidated damages, when the Parties agree to them, are the exclusive remedy for the Participating TO's failure to meet its schedule.

No liquidated damages shall be paid to the Interconnection Customer if: (1) the Interconnection Customer is not ready to commence use of the Participating TO's

Interconnection Facilities or Network Upgrades to take the delivery of power for the Electric Generating Unit's Trial Operation or to export power from the Electric Generating Unit on the specified dates, unless the Interconnection Customer would have been able to commence use of the Participating TO's Interconnection Facilities or Network Upgrades to take the delivery of power for Electric Generating Unit's Trial Operation or to export power from the Electric Generating Unit, but for the Participating TO's delay; (2) the Participating TO's failure to meet the specified dates is the result of the action or inaction of the Interconnection Customer or any other interconnection customer who has entered into an interconnection agreement with the CAISO and/or Participating TO, action or inaction by the CAISO, or any cause beyond the Participating TO's reasonable control or reasonable ability to cure; (3) the Interconnection Customer has assumed responsibility for the design, procurement and construction of the Participating TO's Interconnection Facilities and Stand Alone Network Upgrades; or (4) the Parties have otherwise agreed.

In no event shall the CAISO have any responsibility or liability to the Interconnection Customer for liquidated damages pursuant to the provisions of this Article 5.3.

5.4 Power System Stabilizers. The Interconnection Customer shall procure, install, maintain and operate Power System Stabilizers in accordance with the guidelines and procedures established by the Applicable Reliability Council and in accordance with the provisions of Section 4.6.5.1 of the CAISO Tariff. The CAISO reserves the right to establish reasonable minimum acceptable settings for any installed Power System Stabilizers, subject to the design and operating limitations of the Large Generating Facility. If the Large Generating Facility's Power System Stabilizers are removed from service or not capable of automatic operation, the Interconnection Customer shall immediately notify the CAISO and the Participating TO and restore the Power System Stabilizers to operation as soon as possible. The CAISO shall have the right to order the reduction in output or disconnection of the Large Generating Facility if the reliability of the CAISO Controlled Grid would be adversely affected as a result of improperly tuned Power System Stabilizers. The requirements of this Article 5.4 shall apply to Asynchronous Generating Facilities in accordance with Appendix H.

5.5 Equipment Procurement. If responsibility for construction of the Participating TO's Interconnection Facilities or Network Upgrades is to be borne by the Participating TO, then the Participating TO shall commence design of the Participating TO's Interconnection Facilities or Network Upgrades and procure necessary equipment as soon as practicable after all of the following conditions are satisfied, unless the Parties otherwise agree in writing:

5.5.1 The CAISO, in coordination with the applicable Participating TO(s), has completed the Interconnection Facilities Study pursuant to the Interconnection Facilities Study Agreement;

5.5.2 The Participating TO has received written authorization to proceed with design and procurement from the Interconnection Customer by the date specified in Appendix B, Milestones; and

5.5.3 The Interconnection Customer has provided security to the Participating TO in accordance with Article 11.5 by the dates specified in Appendix B, Milestones.

5.6 Construction Commencement. The Participating TO shall commence construction of the Participating TO's Interconnection Facilities and Network Upgrades for which it is responsible as soon as practicable after the following additional conditions are satisfied:

5.6.1 Approval of the appropriate Governmental Authority has been obtained for any facilities requiring regulatory approval;

5.6.2 Necessary real property rights and rights-of-way have been obtained, to the extent required for the construction of a discrete aspect of the Participating TO's Interconnection Facilities and Network Upgrades;

5.6.3 The Participating TO has received written authorization to proceed with construction from the Interconnection Customer by the date specified in Appendix B, Milestones; and

5.6.4 The Interconnection Customer has provided payment and security to the Participating TO in accordance with Article 11.5 by the dates specified in Appendix B, Milestones.

5.7 Work Progress. The Parties will keep each other advised periodically as to the progress of their respective design, procurement and construction efforts. Any Party may, at any time, request a progress report from another Party. If, at any time, the Interconnection Customer determines that the completion of the Participating TO's Interconnection Facilities will not be required until after the specified In-Service Date, the Interconnection Customer will provide written notice to the Participating TO and CAISO of such later date upon which the completion of the Participating TO's Interconnection Facilities will be required.

5.8 Information Exchange. As soon as reasonably practicable after the Effective Date, the Parties shall exchange information regarding the design and compatibility of the Interconnection Customer's Interconnection Facilities and Participating TO's Interconnection Facilities and compatibility of the Interconnection Facilities with the Participating TO's Transmission System, and shall work diligently and in good faith to make any necessary design changes.

5.9 Limited Operation. If any of the Participating TO's Interconnection Facilities or

Network Upgrades are not reasonably expected to be completed prior to the Commercial Operation Date of the Electric Generating Unit, the Participating TO and/or CAISO, as applicable, shall, upon the request and at the expense of the Interconnection Customer, perform operating studies on a timely basis to determine the extent to which the Electric Generating Unit and the Interconnection Customer's Interconnection Facilities may operate prior to the completion of the Participating TO's Interconnection Facilities or Network Upgrades consistent with Applicable Laws and Regulations, Applicable Reliability Standards, Good Utility Practice, and this LGIA. The Participating TO and CAISO shall permit Interconnection Customer to operate the Electric Generating Unit and the Interconnection Customer's Interconnection Facilities in accordance with the results of such studies.

5.10 Interconnection Customer's Interconnection Facilities. The Interconnection Customer shall, at its expense, design, procure, construct, own and install the Interconnection Customer's Interconnection Facilities, as set forth in Appendix A.

5.10.1 Large Generating Facility and Interconnection Customer's Interconnection Facilities Specifications. The Interconnection Customer shall submit initial specifications for the Interconnection Customer's Interconnection Facilities and Large Generating Facility, including System Protection Facilities, to the Participating TO and the CAISO at least one hundred eighty (180) Calendar Days prior to the Initial Synchronization Date; and final specifications for review and comment at least ninety (90) Calendar Days prior to the Initial Synchronization Date. The Participating TO and the CAISO shall review such specifications pursuant to this LGIA and the LGIP to ensure that the Interconnection Customer's Interconnection Facilities and Large Generating Facility are compatible with the technical specifications, operational control, safety requirements, and any other applicable requirements of the Participating TO and the CAISO and comment on such specifications within thirty (30) Calendar Days of the Interconnection Customer's submission. All specifications provided hereunder shall be deemed confidential.

5.10.2 Participating TO's and CAISO's Review. The Participating TO's and the CAISO's review of the Interconnection Customer's final specifications shall not be construed as confirming, endorsing, or providing a warranty as to the design, fitness, safety, durability or reliability of the Large Generating Facility, or the Interconnection Customer's Interconnection Facilities. Interconnection Customer shall make such changes to the Interconnection Customer's Interconnection Facilities as may reasonably be required by the Participating TO or the CAISO, in accordance with Good Utility Practice, to ensure that the Interconnection Customer's Interconnection Facilities are compatible with the technical specifications, Operational Control, and safety requirements of the Participating TO or the CAISO.

5.10.3 Interconnection Customer's Interconnection Facilities Construction.

The Interconnection Customer's Interconnection Facilities shall be designed and constructed in accordance with Good Utility Practice. Within one hundred twenty (120) Calendar Days after the Commercial Operation Date, unless the Participating TO and Interconnection Customer agree on another mutually acceptable deadline, the Interconnection Customer shall deliver to the Participating TO and CAISO "as-built" drawings, information and documents for the Interconnection Customer's Interconnection Facilities and the Electric Generating Unit(s), such as: a one-line diagram, a site plan showing the Large Generating Facility and the Interconnection Customer's Interconnection Facilities, plan and elevation drawings showing the layout of the Interconnection Customer's Interconnection Facilities, a relay functional diagram, relaying AC and DC schematic wiring diagrams and relay settings for all facilities associated with the Interconnection Customer's step-up transformers, the facilities connecting the Large Generating Facility to the step-up transformers and the Interconnection Customer's Interconnection Facilities, and the impedances (determined by factory tests) for the associated step-up transformers and the Electric Generating Units. The Interconnection Customer shall provide the Participating TO and the CAISO specifications for the excitation system, automatic voltage regulator, Large Generating Facility control and protection settings, transformer tap settings, and communications, if applicable. Any deviations from the relay settings, machine specifications, and other specifications originally submitted by the Interconnection Customer shall be assessed by the Participating TO and the CAISO pursuant to the appropriate provisions of this LGIA and the LGIP.

5.10.4 Interconnection Customer to Meet Requirements of the Participating TO's Interconnection Handbook. The Interconnection Customer shall comply with the Participating TO's Interconnection Handbook.

5.11 Participating TO's Interconnection Facilities Construction. The Participating TO's Interconnection Facilities shall be designed and constructed in accordance with Good Utility Practice. Upon request, within one hundred twenty (120) Calendar Days after the Commercial Operation Date, unless the Participating TO and Interconnection Customer agree on another mutually acceptable deadline, the Participating TO shall deliver to the Interconnection Customer and the CAISO the following "as-built" drawings, information and documents for the Participating TO's Interconnection Facilities. No as-built drawings will be provided.

The Participating TO will obtain control for operating and maintenance purposes of the Participating TO's Interconnection Facilities and Stand Alone Network Upgrades upon completion of such facilities. Pursuant to Article 5.2, the CAISO will obtain Operational Control of the Stand Alone Network Upgrades prior to the Commercial Operation Date.

5.12 Access Rights. Upon reasonable notice and supervision by a Party, and subject to any required or necessary regulatory approvals, a Party ("Granting Party") shall furnish at no cost to the other Party ("Access Party") any rights of use, licenses, rights of way and easements with respect to lands owned or controlled by the Granting Party, its agents (if allowed under the applicable agency agreement), or any Affiliate, that are necessary to enable the Access Party to obtain ingress and egress to construct, operate, maintain, repair, test (or witness testing), inspect, replace or remove facilities and equipment to: (i) interconnect the Large Generating Facility with the Participating TO's Transmission System; (ii) operate and maintain the Large Generating Facility, the Interconnection Facilities and the Participating TO's Transmission System; and (iii) disconnect or remove the Access Party's facilities and equipment upon termination of this LGIA. In exercising such licenses, rights of way and easements, the Access Party shall not unreasonably disrupt or interfere with normal operation of the Granting Party's business and shall adhere to the safety rules and procedures established in advance, as may be changed from time to time, by the Granting Party and provided to the Access Party.

5.13 Lands of Other Property Owners. If any part of the Participating TO's Interconnection Facilities and/or Network Upgrades are to be installed on property owned by persons other than the Interconnection Customer or Participating TO, the Participating TO shall at the Interconnection Customer's expense use efforts, similar in nature and extent to those that it typically undertakes on its own behalf or on behalf of its Affiliates, including use of its eminent domain authority, and to the extent consistent with state law, to procure from such persons any rights of use, licenses, rights of way and easements that are necessary to construct, operate, maintain, test, inspect, replace or remove the Participating TO's Interconnection Facilities and/or Network Upgrades upon such property.

5.14 Permits. Participating TO and Interconnection Customer shall cooperate with each other in good faith in obtaining all permits, licenses and authorization that are necessary to accomplish the interconnection in compliance with Applicable Laws and Regulations. With respect to this paragraph, the Participating TO shall provide permitting assistance to the Interconnection Customer comparable to that provided to the Participating TO's own, or an Affiliate's generation.

5.15 Early Construction of Base Case Facilities. The Interconnection Customer may request the Participating TO to construct, and the Participating TO shall construct, using Reasonable Efforts to accommodate Interconnection Customer's In-Service Date, all or any portion of any Network Upgrades required for Interconnection Customer to be interconnected to the Participating TO's Transmission System which are included in the Base Case of the Interconnection Studies for the Interconnection Customer, and which also are required to be constructed for another interconnection customer, but where such construction is not scheduled to be completed in time to achieve Interconnection Customer's In-

Service Date.

5.16 Suspension. This Article left intentionally blank.

5.17 Taxes.

5.17.1 Interconnection Customer Payments Not Taxable. The Parties intend that all payments or property transfers made by the Interconnection Customer to the Participating TO for the installation of the Participating TO's Interconnection Facilities and the Network Upgrades shall be non-taxable, either as contributions to capital, or as a refundable advance, in accordance with the Internal Revenue Code and any applicable state income tax laws and shall not be taxable as contributions in aid of construction or otherwise under the Internal Revenue Code and any applicable state income tax laws.

5.17.2 Representations And Covenants. In accordance with IRS Notice 2001-82 and IRS Notice 88-129, the Interconnection Customer represents and covenants that (i) ownership of the electricity generated at the Large Generating Facility will pass to another party prior to the transmission of the electricity on the CAISO Controlled Grid, (ii) for income tax purposes, the amount of any payments and the cost of any property transferred to the Participating TO for the Participating TO's Interconnection Facilities will be capitalized by the Interconnection Customer as an intangible asset and recovered using the straight-line method over a useful life of twenty (20) years, and (iii) any portion of the Participating TO's Interconnection Facilities that is a "dual-use intertie," within the meaning of IRS Notice 88-129, is reasonably expected to carry only a de minimis amount of electricity in the direction of the Large Generating Facility. For this purpose, "de minimis amount" means no more than 5 percent of the total power flows in both directions, calculated in accordance with the "5 percent test" set forth in IRS Notice 88-129. This is not intended to be an exclusive list of the relevant conditions that must be met to conform to IRS requirements for non-taxable treatment.

At the Participating TO's request, the Interconnection Customer shall provide the Participating TO with a report from an independent engineer confirming its representation in clause (iii), above. The Participating TO represents and covenants that the cost of the Participating TO's Interconnection Facilities paid for by the Interconnection Customer without the possibility of refund or credit will have no net effect on the base upon which rates are determined.

5.17.3 Indemnification for the Cost Consequence of Current Tax Liability Imposed Upon the Participating TO. Notwithstanding Article 5.17.1, the Interconnection Customer shall protect, indemnify and hold harmless the

Participating TO from the cost consequences of any current tax liability imposed against the Participating TO as the result of payments or property transfers made by the Interconnection Customer to the Participating TO under this LGIA for Interconnection Facilities, as well as any interest and penalties, other than interest and penalties attributable to any delay caused by the Participating TO.

The Participating TO shall not include a gross-up for the cost consequences of any current tax liability in the amounts it charges the Interconnection Customer under this LGIA unless (i) the Participating TO has determined, in good faith, that the payments or property transfers made by the Interconnection Customer to the Participating TO should be reported as income subject to taxation or (ii) any Governmental Authority directs the Participating TO to report payments or property as income subject to taxation; provided, however, that the Participating TO may require the Interconnection Customer to provide security for Interconnection Facilities, in a form reasonably acceptable to the Participating TO (such as a parental guarantee or a letter of credit), in an amount equal to the cost consequences of any current tax liability under this Article 5.17. The Interconnection Customer shall reimburse the Participating TO for such costs on a fully grossed-up basis, in accordance with Article 5.17.4, within thirty (30) Calendar Days of receiving written notification from the Participating TO of the amount due, including detail about how the amount was calculated.

The indemnification obligation shall terminate at the earlier of (1) the expiration of the ten year testing period and the applicable statute of limitation, as it may be extended by the Participating TO upon request of the IRS, to keep these years open for audit or adjustment, or (2) the occurrence of a subsequent taxable event and the payment of any related indemnification obligations as contemplated by this Article 5.17.

5.17.4 Tax Gross-Up Amount. The Interconnection Customer's liability for the cost consequences of any current tax liability under this Article 5.17 shall be calculated on a fully grossed-up basis. Except as may otherwise be agreed to by the parties, this means that the Interconnection Customer will pay the Participating TO, in addition to the amount paid for the Interconnection Facilities and Network Upgrades, an amount equal to (1) the current taxes imposed on the Participating TO ("Current Taxes") on the excess of (a) the gross income realized by the Participating TO as a result of payments or property transfers made by the Interconnection Customer to the Participating TO under this LGIA (without regard to any payments under this Article 5.17) (the "Gross Income Amount") over (b) the present value of future tax deductions for depreciation that will be available as a result of such payments or property transfers (the "Present Value Depreciation Amount"), plus (2) an additional amount sufficient to

permit the Participating TO to receive and retain, after the payment of all Current Taxes, an amount equal to the net amount described in clause (1).

For this purpose, (i) Current Taxes shall be computed based on the Participating TO's composite federal and state tax rates at the time the payments or property transfers are received and the Participating TO will be treated as being subject to tax at the highest marginal rates in effect at that time (the "Current Tax Rate"), and (ii) the Present Value Depreciation Amount shall be computed by discounting the Participating TO's anticipated tax depreciation deductions as a result of such payments or property transfers by the Participating TO's current weighted average cost of capital. Thus, the formula for calculating the Interconnection Customer's liability to the Participating TO pursuant to this Article 5.17.4 can be expressed as follows: (Current Tax Rate x (Gross Income Amount – Present Value of Tax Depreciation))/(1-Current Tax Rate). Interconnection Customer's estimated tax liability in the event taxes are imposed shall be stated in Appendix A, Interconnection Facilities, Network Upgrades and Distribution Upgrades.

5.17.5 Private Letter Ruling or Change or Clarification of Law. At the Interconnection Customer's request and expense, the Participating TO shall file with the IRS a request for a private letter ruling as to whether any property transferred or sums paid, or to be paid, by the Interconnection Customer to the Participating TO under this LGIA are subject to federal income taxation. The Interconnection Customer will prepare the initial draft of the request for a private letter ruling, and will certify under penalties of perjury that all facts represented in such request are true and accurate to the best of the Interconnection Customer's knowledge. The Participating TO and Interconnection Customer shall cooperate in good faith with respect to the submission of such request, provided, however, the Interconnection Customer and the Participating TO explicitly acknowledge (and nothing herein is intended to alter) Participating TO's obligation under law to certify that the facts presented in the ruling request are true, correct and complete.

The Participating TO shall keep the Interconnection Customer fully informed of the status of such request for a private letter ruling and shall execute either a privacy act waiver or a limited power of attorney, in a form acceptable to the IRS, that authorizes the Interconnection Customer to participate in all discussions with the IRS regarding such request for a private letter ruling. The Participating TO shall allow the Interconnection Customer to attend all meetings with IRS officials about the request and shall permit the Interconnection Customer to prepare the initial drafts of any follow-up letters in connection with the request.

5.17.6 Subsequent Taxable Events. If, within 10 years from the date on which the relevant Participating TO's Interconnection Facilities are placed in service, (i) the Interconnection Customer Breaches the covenants contained in Article 5.17.2, (ii) a "disqualification event" occurs within the meaning of IRS Notice 88-129, or (iii) this LGIA terminates and the Participating TO retains ownership of the Interconnection Facilities and Network Upgrades, the Interconnection Customer shall pay a tax gross-up for the cost consequences of any current tax liability imposed on the Participating TO, calculated using the methodology described in Article 5.17.4 and in accordance with IRS Notice 90-60.

5.17.7 Contests. In the event any Governmental Authority determines that the Participating TO's receipt of payments or property constitutes income that is subject to taxation, the Participating TO shall notify the Interconnection Customer, in writing, within thirty (30) Calendar Days of receiving notification of such determination by a Governmental Authority. Upon the timely written request by the Interconnection Customer and at the Interconnection Customer's sole expense, the Participating TO may appeal, protest, seek abatement of, or otherwise oppose such determination. Upon the Interconnection Customer's written request and sole expense, the Participating TO may file a claim for refund with respect to any taxes paid under this Article 5.17, whether or not it has received such a determination. The Participating TO reserve the right to make all decisions with regard to the prosecution of such appeal, protest, abatement or other contest, including the selection of counsel and compromise or settlement of the claim, but the Participating TO shall keep the Interconnection Customer informed, shall consider in good faith suggestions from the Interconnection Customer about the conduct of the contest, and shall reasonably permit the Interconnection Customer or an Interconnection Customer representative to attend contest proceedings.

The Interconnection Customer shall pay to the Participating TO on a periodic basis, as invoiced by the Participating TO, the Participating TO's documented reasonable costs of prosecuting such appeal, protest, abatement or other contest, including any costs associated with obtaining the opinion of independent tax counsel described in this Article 5.17.7. The Participating TO may abandon any contest if the Interconnection Customer fails to provide payment to the Participating TO within thirty (30) Calendar Days of receiving such invoice.

At any time during the contest, the Participating TO may agree to a settlement either with the Interconnection Customer's consent or, if such consent is refused, after obtaining written advice from independent nationally-recognized tax counsel, selected by the Participating TO, but reasonably acceptable to the Interconnection Customer, that the proposed settlement represents a reasonable settlement given the hazards of

litigation. The Interconnection Customer's obligation shall be based on the amount of the settlement agreed to by the Interconnection Customer, or if a higher amount, so much of the settlement that is supported by the written advice from nationally-recognized tax counsel selected under the terms of the preceding paragraph. The settlement amount shall be calculated on a fully grossed-up basis to cover any related cost consequences of the current tax liability. The Participating TO may also settle any tax controversy without receiving the Interconnection Customer's consent or any such written advice; however, any such settlement will relieve the Interconnection Customer from any obligation to indemnify the Participating TO for the tax at issue in the contest (unless the failure to obtain written advice is attributable to the Interconnection Customer's unreasonable refusal to the appointment of independent tax counsel).

5.17.8 Refund. In the event that (a) a private letter ruling is issued to the Participating TO which holds that any amount paid or the value of any property transferred by the Interconnection Customer to the Participating TO under the terms of this LGIA is not subject to federal income taxation, (b) any legislative change or administrative announcement, notice, ruling or other determination makes it reasonably clear to the Participating TO in good faith that any amount paid or the value of any property transferred by the Interconnection Customer to the Participating TO under the terms of this LGIA is not taxable to the Participating TO, (c) any abatement, appeal, protest, or other contest results in a determination that any payments or transfers made by the Interconnection Customer to the Participating TO are not subject to federal income tax, or (d) if the Participating TO receives a refund from any taxing authority for any overpayment of tax attributable to any payment or property transfer made by the Interconnection Customer to the Participating TO pursuant to this LGIA, the Participating TO shall promptly refund to the Interconnection Customer the following:

(i) any payment made by Interconnection Customer under this Article 5.17 for taxes that is attributable to the amount determined to be non-taxable, together with interest thereon,

(ii) interest on any amounts paid by the Interconnection Customer to the Participating TO for such taxes which the Participating TO did not submit to the taxing authority, calculated in accordance with the methodology set forth in FERC's regulations at 18 C.F.R. §35.19a(a)(2)(iii) from the date payment was made by the Interconnection Customer to the date the Participating TO refunds such payment to the Interconnection Customer, and

(iii) with respect to any such taxes paid by the Participating TO, any refund or credit the Participating TO receives or to which it may be

entitled from any Governmental Authority, interest (or that portion thereof attributable to the payment described in clause (i), above) owed to the Participating TO for such overpayment of taxes (including any reduction in interest otherwise payable by the Participating TO to any Governmental Authority resulting from an offset or credit); provided, however, that the Participating TO will remit such amount promptly to the Interconnection Customer only after and to the extent that the Participating TO has received a tax refund, credit or offset from any Governmental Authority for any applicable overpayment of income tax related to the Participating TO's Interconnection Facilities.

The intent of this provision is to leave the Parties, to the extent practicable, in the event that no taxes are due with respect to any payment for Interconnection Facilities and Network Upgrades hereunder, in the same position they would have been in had no such tax payments been made.

5.17.9 Taxes Other Than Income Taxes. Upon the timely request by the Interconnection Customer, and at the Interconnection Customer's sole expense, the CAISO or Participating TO may appeal, protest, seek abatement of, or otherwise contest any tax (other than federal or state income tax) asserted or assessed against the CAISO or Participating TO for which the Interconnection Customer may be required to reimburse the CAISO or Participating TO under the terms of this LGIA. The Interconnection Customer shall pay to the Participating TO on a periodic basis, as invoiced by the Participating TO, the Participating TO's documented reasonable costs of prosecuting such appeal, protest, abatement, or other contest. The Interconnection Customer, the CAISO, and the Participating TO shall cooperate in good faith with respect to any such contest. Unless the payment of such taxes is a prerequisite to an appeal or abatement or cannot be deferred, no amount shall be payable by the Interconnection Customer to the CAISO or Participating TO for such taxes until they are assessed by a final, non-appealable order by any court or agency of competent jurisdiction. In the event that a tax payment is withheld and ultimately due and payable after appeal, the Interconnection Customer will be responsible for all taxes, interest and penalties, other than penalties attributable to any delay caused by the Participating TO.

5.18 Tax Status. Each Party shall cooperate with the others to maintain the other Parties' tax status. Nothing in this LGIA is intended to adversely affect the CAISO's or any Participating TO's tax exempt status with respect to the issuance of bonds including, but not limited to, Local Furnishing Bonds.

5.19 Modification.

5.19.1 General. The Interconnection Customer or the Participating TO may undertake modifications to its facilities, subject to the provisions of this LGIA and the CAISO Tariff. If a Party plans to undertake a modification that reasonably may be expected to affect the other Parties' facilities, that Party shall provide to the other Parties sufficient information regarding such modification so that the other Parties may evaluate the potential impact of such modification prior to commencement of the work. Such information shall be deemed to be confidential hereunder and shall include information concerning the timing of such modifications and whether such modifications are expected to interrupt the flow of electricity from the Large Generating Facility. The Party desiring to perform such work shall provide the relevant drawings, plans, and specifications to the other Parties at least ninety (90) Calendar Days in advance of the commencement of the work or such shorter period upon which the Parties may agree, which agreement shall not unreasonably be withheld, conditioned or delayed.

In the case of Large Generating Facility modifications that do not require the Interconnection Customer to submit an Interconnection Request, the CAISO or Participating TO shall provide, within thirty (30) Calendar Days (or such other time as the Parties may agree), an estimate of any additional modifications to the CAISO Controlled Grid, Participating TO's Interconnection Facilities, Network Upgrades or Distribution Upgrades necessitated by such Interconnection Customer modification and a good faith estimate of the costs thereof. The Participating TO and the CAISO shall determine if a Large Generating Facility modification is a Material Modification in accordance with the LGIP.

5.19.2 Standards. Any additions, modifications, or replacements made to a Party's facilities shall be designed, constructed and operated in accordance with this LGIA and Good Utility Practice.

5.19.3 Modification Costs. The Interconnection Customer shall not be directly assigned the costs of any additions, modifications, or replacements that the Participating TO makes to the Participating TO's Interconnection Facilities or the Participating TO's Transmission System to facilitate the interconnection of a third party to the Participating TO's Interconnection Facilities or the Participating TO's Transmission System, or to provide transmission service to a third party under the CAISO Tariff. The Interconnection Customer shall be responsible for the costs of any additions, modifications, or replacements to the Interconnection Facilities that may be necessary to maintain or upgrade such Interconnection Facilities consistent with Applicable Laws and Regulations, Applicable Reliability Standards or Good Utility Practice.

ARTICLE 6. TESTING AND INSPECTION

6.1 Pre-Commercial Operation Date Testing and Modifications. Prior to the Commercial Operation Date, the Participating TO shall test the Participating TO's Interconnection Facilities, Network Upgrades, and Distribution Upgrades and the Interconnection Customer shall test the Large Generating Facility and the Interconnection Customer's Interconnection Facilities to ensure their safe and reliable operation. Similar testing may be required after initial operation. Each Party shall make any modifications to its facilities that are found to be necessary as a result of such testing. The Interconnection Customer shall bear the cost of all such testing and modifications. The Interconnection Customer shall not commence initial parallel operation of an Electric Generating Unit with the Participating TO's Transmission System until the Participating TO provides prior written approval, which approval shall not be unreasonably withheld, for operation of such Electric Generating Unit. The Interconnection Customer shall generate test energy at the Large Generating Facility only if it has arranged for the delivery of such test energy.

6.2 Post-Commercial Operation Date Testing and Modifications. Each Party shall at its own expense perform routine inspection and testing of its facilities and equipment in accordance with Good Utility Practice as may be necessary to ensure the continued interconnection of the Large Generating Facility with the Participating TO's Transmission System in a safe and reliable manner. Each Party shall have the right, upon advance written notice, to require reasonable additional testing of the other Party's facilities, at the requesting Party's expense, as may be in accordance with Good Utility Practice.

6.3 Right to Observe Testing. Each Party shall notify the other Parties at least fourteen (14) days in advance of its performance of tests of its Interconnection Facilities or Generating Facility. The other Parties have the right, at their own expense, to observe such testing.

6.4 Right to Inspect. Each Party shall have the right, but shall have no obligation to: (i) observe another Party's tests and/or inspection of any of its System Protection Facilities and other protective equipment, including Power System Stabilizers; (ii) review the settings of another Party's System Protection Facilities and other protective equipment; and (iii) review another Party's maintenance records relative to the Interconnection Facilities, the System Protection Facilities and other protective equipment. A Party may exercise these rights from time to time as it deems necessary upon reasonable notice to the other Party. The exercise or non-exercise by a Party of any such rights shall not be construed as an endorsement or confirmation of any element or condition of the Interconnection Facilities or the System Protection Facilities or other protective equipment or the operation thereof, or as a warranty as to the fitness, safety, desirability, or reliability of same. Any information that a Party obtains through

the exercise of any of its rights under this Article 6.4 shall be deemed to be Confidential Information and treated pursuant to Article 22 of this LGIA.

ARTICLE 7. METERING

7.1 General. Each Party shall comply with the Applicable Reliability Council requirements. The Interconnection Customer and CAISO shall comply with the provisions of the CAISO Tariff regarding metering, including Section 10 of the CAISO Tariff. Unless otherwise agreed by the Participating TO and the Interconnection Customer, the Participating TO may install additional Metering Equipment at the Point of Interconnection prior to any operation of any Electric Generating Unit and shall own, operate, test and maintain such Metering Equipment. Power flows to and from the Large Generating Facility shall be measured at or, at the CAISO's or Participating TO's option for its respective Metering Equipment, compensated to, the Point of Interconnection. The CAISO shall provide metering quantities to the Interconnection Customer upon request in accordance with the CAISO Tariff by directly polling the CAISO's meter data acquisition system. The Interconnection Customer shall bear all reasonable documented costs associated with the purchase, installation, operation, testing and maintenance of the Metering Equipment.

7.2 Check Meters. The Interconnection Customer, at its option and expense, may install and operate, on its premises and on its side of the Point of Interconnection, one or more check meters to check the CAISO-polled meters or the Participating TO's meters. Such check meters shall be for check purposes only and shall not be used for the measurement of power flows for purposes of this LGIA, except in the case that no other means are available on a temporary basis at the option of the CAISO or the Participating TO. The check meters shall be subject at all reasonable times to inspection and examination by the CAISO or Participating TO or their designees. The installation, operation and maintenance thereof shall be performed entirely by the Interconnection Customer in accordance with Good Utility Practice.

7.3 Participating TO Retail Metering. The Participating TO may install retail revenue quality meters and associated equipment, pursuant to the Participating TO's applicable retail tariffs.

ARTICLE 8. COMMUNICATIONS

8.1 Interconnection Customer Obligations. The Interconnection Customer shall maintain satisfactory operating communications with the CAISO in accordance with the provisions of the CAISO Tariff and with the Participating TO's dispatcher or representative designated by the Participating TO. The Interconnection Customer shall provide standard voice line, dedicated voice line and facsimile

communications at its Large Generating Facility control room or central dispatch facility through use of either the public telephone system, or a voice communications system that does not rely on the public telephone system. The Interconnection Customer shall also provide the dedicated data circuit(s) necessary to provide Interconnection Customer data to the CAISO and Participating TO as set forth in Appendix D, Security Arrangements Details. The data circuit(s) shall extend from the Large Generating Facility to the location(s) specified by the CAISO and Participating TO. Any required maintenance of such communications equipment shall be performed by the Interconnection Customer. Operational communications shall be activated and maintained under, but not be limited to, the following events: system paralleling or separation, scheduled and unscheduled shutdowns, equipment clearances, and hourly and daily load data.

8.2 Remote Terminal Unit. Prior to the Initial Synchronization Date of each Electric Generating Unit, a Remote Terminal Unit, or equivalent data collection and transfer equipment acceptable to the Parties, shall be installed by the Interconnection Customer, or by the Participating TO at the Interconnection Customer's expense, to gather accumulated and instantaneous data to be telemetered to the location(s) designated by the CAISO and by the Participating TO through use of a dedicated point-to-point data circuit(s) as indicated in Article 8.1.
Telemetry to the CAISO shall be provided in accordance with the CAISO's technical standards for direct telemetry. For telemetry to the Participating TO, the communication protocol for the data circuit(s) shall be specified by the Participating TO. Instantaneous bi-directional real power and reactive power flow and any other required information must be telemetered directly to the location(s) specified by the Participating TO.

Each Party will promptly advise the other Parties if it detects or otherwise learns of any metering, telemetry or communications equipment errors or malfunctions that require the attention and/or correction by another Party. The Party owning such equipment shall correct such error or malfunction as soon as reasonably feasible.

8.3 No Annexation. Any and all equipment placed on the premises of a Party shall be and remain the property of the Party providing such equipment regardless of the mode and manner of annexation or attachment to real property, unless otherwise mutually agreed by the Parties.

ARTICLE 9. OPERATIONS

9.1 General. Each Party shall comply with the Applicable Reliability Council requirements. Each Party shall provide to the other Party all information that may reasonably be required by the other Party to comply with Applicable Laws and Regulations and Applicable Reliability Standards.

9.2 Balancing Authority Area Notification. At least three months before Initial Synchronization Date, the Interconnection Customer shall notify the CAISO and Participating TO in writing of the Balancing Authority Area in which the Large Generating Facility intends to be located. If the Interconnection Customer intends to locate the Large Generating Facility in a Balancing Authority Area other than the Balancing Authority Area within whose electrically metered boundaries the Large Generating Facility is located, and if permitted to do so by the relevant transmission tariffs, all necessary arrangements, including but not limited to those set forth in Article 7 and Article 8 of this LGIA, and remote Balancing Authority Area generator interchange agreements, if applicable, and the appropriate measures under such agreements, shall be executed and implemented prior to the placement of the Large Generating Facility in the other Balancing Authority Area.

9.3 CAISO and Participating TO Obligations. The CAISO and Participating TO shall cause the Participating TO's Transmission System to be operated and controlled in a safe and reliable manner and in accordance with this LGIA. The Participating TO at the Interconnection Customer's expense shall cause the Participating TO's Interconnection Facilities to be operated, maintained and controlled in a safe and reliable manner and in accordance with this LGIA. The CAISO and Participating TO may provide operating instructions to the Interconnection Customer consistent with this LGIA and Participating TO and CAISO operating protocols and procedures as they may change from time to time. The Participating TO and CAISO will consider changes to their operating protocols and procedures proposed by the Interconnection Customer.

9.4 Interconnection Customer Obligations. The Interconnection Customer shall at its own expense operate, maintain and control the Large Generating Facility and the Interconnection Customer's Interconnection Facilities in a safe and reliable manner and in accordance with this LGIA. The Interconnection Customer shall operate the Large Generating Facility and the Interconnection Customer's Interconnection Facilities in accordance with all applicable requirements of the Balancing Authority Area of which it is part, including such requirements as set forth in Appendix C, Interconnection Details, of this LGIA. Appendix C, Interconnection Details, will be modified to reflect changes to the requirements as they may change from time to time. A Party may request that another Party provide copies of the requirements set forth in Appendix C, Interconnection Details, of this LGIA. The Interconnection Customer shall not commence Commercial Operation of an Electric Generating Unit with the Participating TO's Transmission System until the Participating TO provides prior written approval, which approval shall not be unreasonably withheld, for operation of such Electric Generating Unit.

9.5 Start-Up and Synchronization. Consistent with the Parties' mutually acceptable procedures, the Interconnection Customer is responsible for the

proper synchronization of each Electric Generating Unit to the CAISO Controlled Grid.

9.6 Reactive Power.

9.6.1 Power Factor Design Criteria. For all Generating Facilities other than Asynchronous Generating Facilities, the Interconnection Customer shall design the Large Generating Facility to maintain a composite power delivery at continuous rated power output at the terminals of the Electric Generating Unit at a power factor within the range of 0.95 leading to 0.90 lagging, unless the CAISO has established different requirements that apply to all generators in the Balancing Authority Area on a comparable basis. For Asynchronous Generating Facilities, the Interconnection Customer shall design the Large Generating Facility to maintain power factor criteria in accordance with **Appendix H of this LGIA.**

9.6.2 Voltage Schedules. Once the Interconnection Customer has synchronized an Electric Generating Unit with the CAISO Controlled Grid, the CAISO or Participating TO shall require the Interconnection Customer to maintain a voltage schedule by operating the Electric Generating Unit to produce or absorb reactive power within the design limitations of the Electric Generating Unit set forth in Article 9.6.1 (Power Factor Design Criteria). CAISO's voltage schedules shall treat all sources of reactive power in the Balancing Authority Area in an equitable and not unduly discriminatory manner. The Participating TO shall exercise Reasonable Efforts to provide the Interconnection Customer with such schedules at least one (1) day in advance, and the CAISO or Participating TO may make changes to such schedules as necessary to maintain the reliability of the CAISO Controlled Grid or the Participating TO's electric system. The Interconnection Customer shall operate the Electric Generating Unit to maintain the specified output voltage or power factor within the design limitations of the Electric Generating Unit set forth in Article 9.6.1 (Power Factor Design Criteria), and as may be required by the CAISO to operate the Electric Generating Unit at a specific voltage schedule within the design limitations set forth in Article 9.6.1. If the Interconnection Customer is unable to maintain the specified voltage or power factor, it shall promptly notify the CAISO and the Participating TO.

9.6.2.1 Governors and Regulators. Whenever an Electric Generating Unit is operated in parallel with the CAISO Controlled Grid and the speed governors (if installed on the Electric Generating Unit pursuant to Good Utility Practice) and voltage regulators are capable of operation, the Interconnection Customer shall operate the Electric Generating Unit with its speed governors and voltage regulators in automatic operation. If the Electric Generating Unit's speed governors and voltage regulators are not capable of such

automatic operation, the Interconnection Customer shall immediately notify the CAISO and the Participating TO and ensure that the Electric Generating Unit operates as specified in Article 9.6.2 through manual operation and that such Electric Generating Unit's reactive power production or absorption (measured in MVARs) are within the design capability of the Electric Generating Unit(s) and steady state stability limits. The Interconnection Customer shall restore the speed governors and voltage regulators to automatic operation as soon as possible. If the Large Generating Facility's speed governors and voltage regulators are improperly tuned or malfunctioning, the CAISO shall have the right to order the reduction in output or disconnection of the Large Generating Facility if the reliability of the CAISO Controlled Grid would be adversely affected. The Interconnection Customer shall not cause its Large Generating Facility to disconnect automatically or instantaneously from the CAISO Controlled Grid or trip any Electric Generating Unit comprising the Large Generating Facility for an under or over frequency condition unless the abnormal frequency condition persists for a time period beyond the limits set forth in ANSI/IEEE Standard C37.106, or such other standard as applied to other generators in the Balancing Authority Area on a comparable basis.

9.6.3 Payment for Reactive Power. CAISO is required to pay the Interconnection Customer for reactive power that Interconnection Customer provides or absorbs from an Electric Generating Unit when the CAISO requests the Interconnection Customer to operate its Electric Generating Unit outside the range specified in Article 9.6.1, provided that if the CAISO pays other generators for reactive power service within the specified range, it must also pay the Interconnection Customer. Payments shall be pursuant to Article 11.6 or such other agreement to which the CAISO and Interconnection Customer have otherwise agreed.

9.7 Outages and Interruptions.

9.7.1 Outages.

9.7.1.1 Outage Authority and Coordination. Each Party may in accordance with Good Utility Practice in coordination with the other Parties remove from service any of its respective Interconnection Facilities or Network Upgrades that may impact another Party's facilities as necessary to perform maintenance or testing or to install or replace equipment. Absent an Emergency Condition, the Party scheduling a removal of such facility(ies) from service will use Reasonable Efforts to schedule such removal on a date and time mutually acceptable to all Parties. In all circumstances any Party

planning to remove such facility(ies) from service shall use Reasonable Efforts to minimize the effect on the other Parties of such removal.

9.7.1.2 Outage Schedules. The CAISO shall post scheduled outages of CAISO Controlled Grid facilities in accordance with the provisions of the CAISO Tariff. The Interconnection Customer shall submit its planned maintenance schedules for the Large Generating Facility to the CAISO in accordance with the CAISO Tariff. The Interconnection Customer shall update its planned maintenance schedules in accordance with the CAISO Tariff. The CAISO may request the Interconnection Customer to reschedule its maintenance as necessary to maintain the reliability of the CAISO Controlled Grid in accordance with the CAISO Tariff. Such planned maintenance schedules and updates and changes to such schedules shall be provided by the Interconnection Customer to the Participating TO concurrently with their submittal to the CAISO. The CAISO shall compensate the Interconnection Customer for any additional direct costs that the Interconnection Customer incurs as a result of having to reschedule maintenance in accordance with the CAISO Tariff. The Interconnection Customer will not be eligible to receive compensation, if during the twelve (12) months prior to the date of the scheduled maintenance, the Interconnection Customer had modified its schedule of maintenance activities.

9.7.1.3 Outage Restoration. If an outage on a Party's Interconnection Facilities or Network Upgrades adversely affects another Party's operations or facilities, the Party that owns or controls the facility that is out of service shall use Reasonable Efforts to promptly restore such facility(ies) to a normal operating condition consistent with the nature of the outage. The Party that owns or controls the facility that is out of service shall provide the other Parties, to the extent such information is known, information on the nature of the Emergency Condition, if the outage is caused by an Emergency Condition, an estimated time of restoration, and any corrective actions required. Initial verbal notice shall be followed up as soon as practicable with written notice explaining the nature of the outage, if requested by a Party, which may be provided by e-mail or facsimile.

9.7.2 Interruption of Service. If required by Good Utility Practice to do so, the CAISO or the Participating TO may require the Interconnection Customer to interrupt or reduce deliveries of electricity if such delivery of electricity could adversely affect the CAISO's or the Participating TO's ability to perform such activities as are necessary to safely and reliably operate and maintain the Participating TO's electric system or the CAISO Controlled

Grid. The following provisions shall apply to any interruption or reduction permitted under this Article 9.7.2:

9.7.2.1 The interruption or reduction shall continue only for so long as reasonably necessary under Good Utility Practice;

9.7.2.2 Any such interruption or reduction shall be made on an equitable, non-discriminatory basis with respect to all generating facilities directly connected to the CAISO Controlled Grid, subject to any conditions specified in this LGIA;

9.7.2.3 When the interruption or reduction must be made under circumstances which do not allow for advance notice, the CAISO or Participating TO, as applicable, shall notify the Interconnection Customer by telephone as soon as practicable of the reasons for the curtailment, interruption, or reduction, and, if known, its expected duration. Telephone notification shall be followed by written notification, if requested by the Interconnection Customer, as soon as practicable;

9.7.2.4 Except during the existence of an Emergency Condition, the CAISO or Participating TO shall notify the Interconnection Customer in advance regarding the timing of such interruption or reduction and further notify the Interconnection Customer of the expected duration. The CAISO or Participating TO shall coordinate with the Interconnection Customer using Good Utility Practice to schedule the interruption or reduction during periods of least impact to the Interconnection Customer, the CAISO, and the Participating TO;

9.7.2.5 The Parties shall cooperate and coordinate with each other to the extent necessary in order to restore the Large Generating Facility, Interconnection Facilities, the Participating TO's Transmission System, and the CAISO Controlled Grid to their normal operating state, consistent with system conditions and Good Utility Practice.

9.7.3 Under-Frequency and Over Frequency Conditions. The CAISO Controlled Grid is designed to automatically activate a load-shed program as required by the Applicable Reliability Council in the event of an under-frequency system disturbance. The Interconnection Customer shall implement under-frequency and over-frequency protection set points for the Large Generating Facility as required by the Applicable Reliability Council to ensure "ride through" capability. Large Generating Facility response to frequency deviations of pre-determined magnitudes, both under-frequency and over-frequency deviations, shall be studied and

coordinated with the Participating TO and CAISO in accordance with Good Utility Practice. The term "ride through" as used herein shall mean the ability of a Generating Facility to stay connected to and synchronized with the CAISO Controlled Grid during system disturbances within a range of under-frequency and over-frequency conditions, in accordance with Good Utility Practice. Asynchronous Generating Facilities shall be subject to frequency ride through capability requirements in accordance with Appendix H to this LGIA.

9.7.4 System Protection and Other Control Requirements.

9.7.4.1 System Protection Facilities. The Interconnection Customer shall, at its expense, install, operate and maintain System Protection Facilities as a part of the Large Generating Facility or the Interconnection Customer's Interconnection Facilities. The Participating TO shall install at the Interconnection Customer's expense any System Protection Facilities that may be required on the Participating TO's Interconnection Facilities or the Participating TO's Transmission System as a result of the interconnection of the Large Generating Facility and the Interconnection Customer's Interconnection Facilities.

9.7.4.2 The Participating TO's and Interconnection Customer's protection facilities shall be designed and coordinated with other systems in accordance with Applicable Reliability Council criteria and Good Utility Practice.

9.7.4.3 The Participating TO and Interconnection Customer shall each be responsible for protection of its facilities consistent with Good Utility Practice.

9.7.4.4 The Participating TO's and Interconnection Customer's protective relay design shall incorporate the necessary test switches to perform the tests required in Article 6. The required test switches will be placed such that they allow operation of lockout relays while preventing breaker failure schemes from operating and causing unnecessary breaker operations and/or the tripping of the Interconnection Customer's Electric Generating Units.

9.7.4.5 The Participating TO and Interconnection Customer will test, operate and maintain System Protection Facilities in accordance with Good Utility Practice and, if applicable, the requirements of the Participating TO's Interconnection Handbook.

9.7.4.6 Prior to the in-service date, and again prior to the Commercial

Operation Date, the Participating TO and Interconnection Customer or their agents shall perform a complete calibration test and functional trip test of the System Protection Facilities. At intervals suggested by Good Utility Practice, the standards and procedures of the Participating TO, including, if applicable, the requirements of the Participating TO's Interconnection Handbook, and following any apparent malfunction of the System Protection Facilities, each Party shall perform both calibration and functional trip tests of its System Protection Facilities. These tests do not require the tripping of any in-service generation unit. These tests do, however, require that all protective relays and lockout contacts be activated.

9.7.5 Requirements for Protection. In compliance with Good Utility Practice and, if applicable, the requirements of the Participating TO's Interconnection Handbook, the Interconnection Customer shall provide, install, own, and maintain relays, circuit breakers and all other devices necessary to remove any fault contribution of the Large Generating Facility to any short circuit occurring on the Participating TO's Transmission System not otherwise isolated by the Participating TO's equipment, such that the removal of the fault contribution shall be coordinated with the protective requirements of the Participating TO's Transmission System. Such protective equipment shall include, without limitation, a disconnecting device with fault current-interrupting capability located between the Large Generating Facility and the Participating TO's Transmission System at a site selected upon mutual agreement (not to be unreasonably withheld, conditioned or delayed) of the Parties. The Interconnection Customer shall be responsible for protection of the Large Generating Facility and the Interconnection Customer's other equipment from such conditions as negative sequence currents, over- or under-frequency, sudden load rejection, over- or under-voltage, and generator loss-of-field. The Interconnection Customer shall be solely responsible to disconnect the Large Generating Facility and the Interconnection Customer's other equipment if conditions on the CAISO Controlled Grid could adversely affect the Large Generating Facility.

9.7.6 Power Quality. Neither the Participating TO's nor the Interconnection Customer's facilities shall cause excessive voltage flicker nor introduce excessive distortion to the sinusoidal voltage or current waves as defined by ANSI Standard C84.1-1989, in accordance with IEEE Standard 519, any applicable superseding electric industry standard, or any alternative Applicable Reliability Council standard. In the event of a conflict between ANSI Standard C84.1-1989, any applicable superseding electric industry standard, or any alternative Applicable Reliability Council standard, the alternative Applicable Reliability Council standard shall control.

9.8 Switching and Tagging Rules. Each Party shall provide the other Parties a

copy of its switching and tagging rules that are applicable to the other Parties' activities. Such switching and tagging rules shall be developed on a non-discriminatory basis. The Parties shall comply with applicable switching and tagging rules, as amended from time to time, in obtaining clearances for work or for switching operations on equipment.

9.9 Use of Interconnection Facilities by Third Parties.

9.9.1 Purpose of Interconnection Facilities. Except as may be required by Applicable Laws and Regulations, or as otherwise agreed to among the Parties, the Interconnection Facilities shall be constructed for the sole purpose of interconnecting the Large Generating Facility to the Participating TO's Transmission System and shall be used for no other purpose.

9.9.2 Third Party Users. If required by Applicable Laws and Regulations or if the Parties mutually agree, such agreement not to be unreasonably withheld, to allow one or more third parties to use the Participating TO's Interconnection Facilities, or any part thereof, the Interconnection Customer will be entitled to compensation for the capital expenses it incurred in connection with the Interconnection Facilities based upon the pro rata use of the Interconnection Facilities by the Participating TO, all third party users, and the Interconnection Customer, in accordance with Applicable Laws and Regulations or upon some other mutually-agreed upon methodology. In addition, cost responsibility for ongoing costs, including operation and maintenance costs associated with the Interconnection Facilities, will be allocated between the Interconnection Customer and any third party users based upon the pro rata use of the Interconnection Facilities by the Participating TO, all third party users, and the Interconnection Customer, in accordance with Applicable Laws and Regulations or upon some other mutually agreed upon methodology. If the issue of such compensation or allocation cannot be resolved through such negotiations, it shall be submitted to FERC for resolution.

9.10 Disturbance Analysis Data Exchange. The Parties will cooperate with one another in the analysis of disturbances to either the Large Generating Facility or the CAISO Controlled Grid by gathering and providing access to any information relating to any disturbance, including information from oscillography, protective relay targets, breaker operations and sequence of events records, and any disturbance information required by Good Utility Practice.

ARTICLE 10. MAINTENANCE

10.1 Participating TO Obligations. The Participating TO shall maintain the Participating TO's Transmission System and the Participating TO's

Interconnection Facilities in a safe and reliable manner and in accordance with this LGIA.

10.2 Interconnection Customer Obligations. The Interconnection Customer shall maintain the Large Generating Facility and the Interconnection Customer's Interconnection Facilities in a safe and reliable manner and in accordance with this LGIA.

10.3 Coordination. The Parties shall confer regularly to coordinate the planning, scheduling and performance of preventive and corrective maintenance on the Large Generating Facility and the Interconnection Facilities.

10.4 Secondary Systems. The Participating TO and Interconnection Customer shall cooperate with the other Parties in the inspection, maintenance, and testing of control or power circuits that operate below 600 volts, AC or DC, including, but not limited to, any hardware, control or protective devices, cables, conductors, electric raceways, secondary equipment panels, transducers, batteries, chargers, and voltage and current transformers that directly affect the operation of a Party's facilities and equipment which may reasonably be expected to impact the other Parties. Each Party shall provide advance notice to the other Parties before undertaking any work on such circuits, especially on electrical circuits involving circuit breaker trip and close contacts, current transformers, or potential transformers.

10.5 Operating and Maintenance Expenses. Subject to the provisions herein addressing the use of facilities by others, and except for operations and maintenance expenses associated with modifications made for providing interconnection or transmission service to a third party and such third party pays for such expenses, the Interconnection Customer shall be responsible for all reasonable expenses including overheads, associated with: (1) owning, operating, maintaining, repairing, and replacing the Interconnection Customer's Interconnection Facilities; and (2) operation, maintenance, repair and replacement of the Participating TO's Interconnection Facilities.

ARTICLE 11. PERFORMANCE OBLIGATION

11.1 Interconnection Customer's Interconnection Facilities. The Interconnection Customer shall design, procure, construct, install, own and/or control the Interconnection Customer's Interconnection Facilities described in Appendix A at its sole expense.

11.2 Participating TO's Interconnection Facilities. The Participating TO shall design, procure, construct, install, own and/or control the Participating TO's Interconnection Facilities described in Appendix A at the sole expense of the Interconnection Customer. Unless the Participating TO elects to fund the capital for the Participating TO's Interconnection Facilities, they shall be solely funded by

the Interconnection Customer.

11.3 Network Upgrades and Distribution Upgrades. The Participating TO shall design, procure, construct, install, and own the Network Upgrades and Distribution Upgrades described in Appendix A. The Interconnection Customer shall be responsible for all costs related to Distribution Upgrades. Unless the Participating TO elects to fund the capital for the Distribution Upgrades and Network Upgrades, they shall be solely funded by the Interconnection Customer.

11.4 Transmission Credits. No later than thirty (30) days prior to the Commercial Operation Date, the Interconnection Customer may make a one-time election by written notice to the CAISO and the Participating TO to receive Congestion Revenue Rights as defined in and as available under the CAISO Tariff at the time of the election in accordance with the CAISO Tariff, in lieu of a refund of the cost of Network Upgrades in accordance with Article 11.4.1.

11.4.1 Repayment of Amounts Advanced for Network Upgrades. Upon the Commercial Operation Date, the Interconnection Customer shall be entitled to a repayment, equal to the total amount paid to the Participating TO for the cost of Network Upgrades. Such amount shall include any tax gross-up or other tax-related payments associated with Network Upgrades not refunded to the Interconnection Customer pursuant to Article 5.17.8 or otherwise, and shall be paid to the Interconnection Customer by the Participating TO on a dollar-for-dollar basis either through (1) direct payments made on a levelized basis over the five-year period commencing on the Commercial Operation Date; or (2) any alternative payment schedule that is mutually agreeable to the Interconnection Customer and Participating TO, provided that such amount is paid within five (5) years from the Commercial Operation Date. Notwithstanding the foregoing, if this LGIA terminates within five (5) years from the Commercial Operation Date, the Participating TO's obligation to pay refunds to the Interconnection Customer shall cease as of the date of termination. Any repayment shall include interest calculated in accordance with the methodology set forth in FERC's regulations at 18 C.F.R. §35.19a(a)(2)(iii) from the date of any payment for Network Upgrades through the date on which the Interconnection Customer receives a repayment of such payment. Interest shall continue to accrue on the repayment obligation so long as this LGIA is in effect. The Interconnection Customer may assign such repayment rights to any person.

If the Large Generating Facility fails to achieve commercial operation, but it or another Generating Facility is later constructed and makes use of the Network Upgrades, the Participating TO shall at that time reimburse Interconnection Customer for the amounts advanced for the Network Upgrades. Before any such reimbursement can occur, the

Interconnection Customer, or the entity that ultimately constructs the Generating Facility, if different, is responsible for identifying the entity to which reimbursement must be made.

11.4.2 Special Provisions for Affected Systems. The Interconnection Customer shall enter into an agreement with the owner of the Affected System and/or other affected owners of portions of the CAISO Controlled Grid, as applicable, in accordance with the LGIP. Such agreement shall specify the terms governing payments to be made by the Interconnection Customer to the owner of the Affected System and/or other affected owners of portions of the CAISO Controlled Grid as well as the repayment by the owner of the Affected System and/or other affected owners of portions of the CAISO Controlled Grid. In no event shall the Participating TO be responsible for the repayment for any facilities that are not part of the Participating TO's Transmission System.

11.4.3 Notwithstanding any other provision of this LGIA, nothing herein shall be construed as relinquishing or foreclosing any rights, including but not limited to firm transmission rights, capacity rights, Congestion Revenue Rights, or transmission credits, that the Interconnection Customer shall be entitled to, now or in the future under any other agreement or tariff as a result of, or otherwise associated with, the transmission capacity, if any, created by the Network Upgrades, including the right to obtain cash reimbursements or transmission credits for transmission service that is not associated with the Large Generating Facility.

11.5 Provision of Security. At least thirty (30) Calendar Days prior to the commencement of the procurement, installation, or construction of a discrete portion of a Participating TO's Interconnection Facilities, Network Upgrades, or Distribution Upgrades, the Interconnection Customer shall provide the Participating TO, at the Interconnection Customer's option, a guarantee, a surety bond, letter of credit or other form of security that is reasonably acceptable to the Participating TO and is consistent with the Uniform Commercial Code of the jurisdiction identified in Article 14.2.1. Such security for payment shall be in an amount sufficient to cover the costs for constructing, procuring and installing the applicable portion of the Participating TO's Interconnection Facilities, Network Upgrades, or Distribution Upgrades. Such security shall be reduced on a dollar-for-dollar basis for payments made to the Participating TO for these purposes.

In addition:

11.5.1 The guarantee must be made by an entity that meets the creditworthiness requirements of the Participating TO, and contain terms and conditions that guarantee payment of any amount that may be due from the Interconnection Customer, up to an agreed-to maximum amount.

11.5.2 The letter of credit must be issued by a financial institution reasonably acceptable to the Participating TO and must specify a reasonable expiration date.

11.5.3 The surety bond must be issued by an insurer reasonably acceptable to the Participating TO and must specify a reasonable expiration date.

11.6 Interconnection Customer Compensation. If the CAISO requests or directs the Interconnection Customer to provide a service pursuant to Articles 9.6.3 (Payment for Reactive Power) or 13.5.1 of this LGIA, the CAISO shall compensate the Interconnection Customer in accordance with the CAISO Tariff.

11.6.1 Interconnection Customer Compensation for Actions During Emergency Condition. The CAISO shall compensate the Interconnection Customer in accordance with the CAISO Tariff for its provision of real and reactive power and other Emergency Condition services that the Interconnection Customer provides to support the CAISO Controlled Grid during an Emergency Condition in accordance with Article 11.6.

ARTICLE 12. INVOICE

12.1 General. The Participating TO shall submit to the Interconnection Customer, on a monthly basis, invoices of amounts due pursuant to this LGIA for the preceding month. Each invoice shall state the month to which the invoice applies and fully describe the services and equipment provided. The Parties may discharge mutual debts and payment obligations due and owing to each other on the same date through netting, in which case all amounts a Party owes to the other Party under this LGIA, including interest payments or credits, shall be netted so that only the net amount remaining due shall be paid by the owing Party. Notwithstanding the foregoing, any invoices between the CAISO and another Party shall be submitted and paid in accordance with the CAISO Tariff.

12.2 Final Invoice. As soon as reasonably practicable, but within twelve months after completion of the construction of the Participating TO's Interconnection Facilities, Network Upgrades, and Distribution Upgrades, the Participating TO shall provide an invoice of the final cost of the construction of the Participating TO's Interconnection Facilities, Network Upgrades, and Distribution Upgrades, and shall set forth such costs in sufficient detail to enable the Interconnection Customer to compare the actual costs with the estimates and to ascertain deviations, if any, from the cost estimates. The Participating TO shall refund to the Interconnection Customer any amount by which the actual payment by the Interconnection Customer for estimated costs exceeds the actual costs of construction within thirty (30) Calendar Days of the issuance of such final construction invoice; or, in the event the actual costs of construction exceed the

Interconnection Customer's actual payment for estimated costs, then the Interconnection Customer shall pay to the Participating TO any amount by which the actual costs of construction exceed the actual payment by the Interconnection Customer for estimated costs within thirty (30) Calendar Days of the issuance of such final construction invoice.

12.3 Payment. Invoices shall be rendered to the Interconnection Customer at the address specified in Appendix F. The Interconnection Customer shall pay, or Participating TO shall refund, the amounts due within thirty (30) Calendar Days of the Interconnection Customer's receipt of the invoice. All payments shall be made in immediately available funds payable to the Interconnection Customer or Participating TO, or by wire transfer to a bank named and account designated by the invoicing Interconnection Customer or Participating TO. Payment of invoices by any Party will not constitute a waiver of any rights or claims any Party may have under this LGIA.

12.4 Disputes. In the event of a billing dispute between the Interconnection Customer and the Participating TO, the Participating TO and the CAISO shall continue to provide Interconnection Service under this LGIA as long as the Interconnection Customer: (i) continues to make all payments not in dispute; and (ii) pays to the Participating TO or into an independent escrow account the portion of the invoice in dispute, pending resolution of such dispute. If the Interconnection Customer fails to meet these two requirements for continuation of service, then the Participating TO may provide notice to the Interconnection Customer of a Default pursuant to Article 17. Within thirty (30) Calendar Days after the resolution of the dispute, the Party that owes money to the other Party shall pay the amount due with interest calculated in accordance with the methodology set forth in FERC's Regulations at 18 C.F.R. § 35.19a(a)(2)(iii). Notwithstanding the foregoing, any billing dispute between the CAISO and another Party shall be resolved in accordance with the provisions of Article 27 of this LGIA.

ARTICLE 13. EMERGENCIES

13.1 [Reserved]

13.2 Obligations. Each Party shall comply with the Emergency Condition procedures of the CAISO, NERC, the Applicable Reliability Council, Applicable Laws and Regulations, and any emergency procedures set forth in this LGIA.

13.3 Notice. The Participating TO or the CAISO shall notify the Interconnection Customer promptly when it becomes aware of an Emergency Condition that affects the Participating TO's Interconnection Facilities or Distribution System or the CAISO Controlled Grid, respectively, that may reasonably be expected to affect the Interconnection Customer's operation of the Large Generating Facility

or the Interconnection Customer's Interconnection Facilities. The Interconnection Customer shall notify the Participating TO and the CAISO promptly when it becomes aware of an Emergency Condition that affects the Large Generating Facility or the Interconnection Customer's Interconnection Facilities that may reasonably be expected to affect the CAISO Controlled Grid or the Participating TO's Interconnection Facilities. To the extent information is known, the notification shall describe the Emergency Condition, the extent of the damage or deficiency, the expected effect on the operation of the Interconnection Customer's or Participating TO's facilities and operations, its anticipated duration and the corrective action taken and/or to be taken. The initial notice shall be followed as soon as practicable with written notice, if requested by a Party, which may be provided by electronic mail or facsimile, or in the case of the CAISO may be publicly posted on the CAISO's internet web site.

13.4 Immediate Action. Unless, in the Interconnection Customer's reasonable judgment, immediate action is required, the Interconnection Customer shall obtain the consent of the CAISO and the Participating TO, such consent to not be unreasonably withheld, prior to performing any manual switching operations at the Large Generating Facility or the Interconnection Customer's Interconnection Facilities in response to an Emergency Condition declared by the Participating TO or CAISO or in response to any other emergency condition.

13.5 CAISO and Participating TO Authority.

13.5.1 General. The CAISO and Participating TO may take whatever actions or inactions, including issuance of dispatch instructions, with regard to the CAISO Controlled Grid or the Participating TO's Interconnection Facilities or Distribution System they deem necessary during an Emergency Condition in order to (i) preserve public health and safety, (ii) preserve the reliability of the CAISO Controlled Grid or the Participating TO's Interconnection Facilities or Distribution System, and (iii) limit or prevent damage, and (iv) expedite restoration of service.

The Participating TO and the CAISO shall use Reasonable Efforts to minimize the effect of such actions or inactions on the Large Generating Facility or the Interconnection Customer's Interconnection Facilities. The Participating TO or the CAISO may, on the basis of technical considerations, require the Large Generating Facility to mitigate an Emergency Condition by taking actions necessary and limited in scope to remedy the Emergency Condition, including, but not limited to, directing the Interconnection Customer to shut-down, start-up, increase or decrease the real or reactive power output of the Large Generating Facility; implementing a reduction or disconnection pursuant to Article 13.5.2; directing the Interconnection Customer to assist with black start (if available) or restoration efforts; or altering the outage schedules of the Large Generating Facility and the Interconnection Customer's

Interconnection Facilities. Interconnection Customer shall comply with all of the CAISO's and Participating TO's operating instructions concerning Large Generating Facility real power and reactive power output within the manufacturer's design limitations of the Large Generating Facility's equipment that is in service and physically available for operation at the time, in compliance with Applicable Laws and Regulations.

13.5.2 Reduction and Disconnection. The Participating TO or the CAISO may reduce Interconnection Service or disconnect the Large Generating Facility or the Interconnection Customer's Interconnection Facilities when such reduction or disconnection is necessary under Good Utility Practice due to Emergency Conditions. These rights are separate and distinct from any right of curtailment of the CAISO pursuant to the CAISO Tariff. When the CAISO or Participating TO can schedule the reduction or disconnection in advance, the CAISO or Participating TO shall notify the Interconnection Customer of the reasons, timing and expected duration of the reduction or disconnection. The CAISO or Participating TO shall coordinate with the Interconnection Customer using Good Utility Practice to schedule the reduction or disconnection during periods of least impact to the Interconnection Customer and the CAISO and Participating TO. Any reduction or disconnection shall continue only for so long as reasonably necessary under Good Utility Practice. The Parties shall cooperate with each other to restore the Large Generating Facility, the Interconnection Facilities, and the CAISO Controlled Grid to their normal operating state as soon as practicable consistent with Good Utility Practice.

13.6 Interconnection Customer Authority. Consistent with Good Utility Practice, this LGIA, and the CAISO Tariff, the Interconnection Customer may take actions or inactions with regard to the Large Generating Facility or the Interconnection Customer's Interconnection Facilities during an Emergency Condition in order to (i) preserve public health and safety, (ii) preserve the reliability of the Large Generating Facility or the Interconnection Customer's Interconnection Facilities, (iii) limit or prevent damage, and (iv) expedite restoration of service. Interconnection Customer shall use Reasonable Efforts to minimize the effect of such actions or inactions on the CAISO Controlled Grid and the Participating TO's Interconnection Facilities. The CAISO and Participating TO shall use Reasonable Efforts to assist Interconnection Customer in such actions.

13.7 Limited Liability. Except as otherwise provided in Article 11.6.1 of this LGIA, no Party shall be liable to any other Party for any action it takes in responding to an Emergency Condition so long as such action is made in good faith and is consistent with Good Utility Practice.

ARTICLE 14. REGULATORY REQUIREMENTS AND GOVERNING LAW

14.1 Regulatory Requirements. Each Party's obligations under this LGIA shall be subject to its receipt of any required approval or certificate from one or more Governmental Authorities in the form and substance satisfactory to the applying Party, or the Party making any required filings with, or providing notice to, such Governmental Authorities, and the expiration of any time period associated therewith. Each Party shall in good faith seek and use its Reasonable Efforts to obtain such other approvals. Nothing in this LGIA shall require the Interconnection Customer to take any action that could result in its inability to obtain, or its loss of, status or exemption under the Federal Power Act or the Public Utility Holding Company Act of 1935, as amended, or the Public Utility Regulatory Policies Act of 1978, or the Energy Policy Act of 2005.

14.2 Governing Law.

14.2.1 The validity, interpretation and performance of this LGIA and each of its provisions shall be governed by the laws of the state where the Point of Interconnection is located, without regard to its conflicts of law principles.

14.2.2 This LGIA is subject to all Applicable Laws and Regulations.

14.2.3 Each Party expressly reserves the right to seek changes in, appeal, or otherwise contest any laws, orders, rules, or regulations of a Governmental Authority.

ARTICLE 15. NOTICES

15.1 General. Unless otherwise provided in this LGIA, any notice, demand or request required or permitted to be given by a Party to another and any instrument required or permitted to be tendered or delivered by a Party in writing to another shall be effective when delivered and may be so given, tendered or delivered, by recognized national courier, or by depositing the same with the United States Postal Service with postage prepaid, for delivery by certified or registered mail, addressed to the Party, or personally delivered to the Party, at the address set out in Appendix F, Addresses for Delivery of Notices and Billings.

A Party must update the information in Appendix F as information changes. A Party may change the notice information in this LGIA by giving five (5) Business Days written notice prior to the effective date of the change. Such changes shall not constitute an amendment to this LGIA.

15.2 Billings and Payments. Billings and payments shall be sent to the addresses set out in Appendix F.

15.3 Alternative Forms of Notice. Any notice or request required or permitted to be

given by a Party to another and not required by this LGIA to be given in writing may be so given by telephone, facsimile or e-mail to the telephone numbers and e-mail addresses set out in Appendix F.

15.4 Operations and Maintenance Notice. Each Party shall notify the other Parties in writing of the identity of the person(s) that it designates as the point(s) of contact with respect to the implementation of Articles 9 and 10.

ARTICLE 16. FORCE MAJEURE

16.1 Force Majeure.

16.1.1 Economic hardship is not considered a Force Majeure event.

16.1.2 No Party shall be considered to be in Default with respect to any obligation hereunder, (including obligations under Article 4), other than the obligation to pay money when due, if prevented from fulfilling such obligation by Force Majeure. A Party unable to fulfill any obligation hereunder (other than an obligation to pay money when due) by reason of Force Majeure shall give notice and the full particulars of such Force Majeure to the other Party in writing or by telephone as soon as reasonably possible after the occurrence of the cause relied upon. Telephone notices given pursuant to this Article shall be confirmed in writing as soon as reasonably possible and shall specifically state full particulars of the Force Majeure, the time and date when the Force Majeure occurred and when the Force Majeure is reasonably expected to cease. The Party affected shall exercise due diligence to remove such disability with reasonable dispatch, but shall not be required to accede or agree to any provision not satisfactory to it in order to settle and terminate a strike or other labor disturbance.

ARTICLE 17. DEFAULT

17.1 Default

17.1.1 General. No Default shall exist where such failure to discharge an obligation (other than the payment of money) is the result of Force Majeure as defined in this LGIA or the result of an act or omission of the other Party. Upon a Breach, the affected non-Breaching Party(ies) shall give written notice of such Breach to the Breaching Party. Except as provided in Article 17.1.2, the Breaching Party shall have thirty (30) Calendar Days from receipt of the Default notice within which to cure such Breach; provided however, if such Breach is not capable of cure within thirty (30) Calendar Days, the Breaching Party shall commence such cure within thirty (30) Calendar Days after notice and continuously and diligently complete such cure within ninety (90) Calendar Days from

receipt of the Default notice; and, if cured within such time, the Breach specified in such notice shall cease to exist.

17.1.2 Right to Terminate. If a Breach is not cured as provided in this Article, or if a Breach is not capable of being cured within the period provided for herein, the affected non-Breaching Party(ies) shall have the right to declare a Default and terminate this LGIA by written notice at any time until cure occurs, and be relieved of any further obligation hereunder and, whether or not such Party(ies) terminates this LGIA, to recover from the Breaching Party all amounts due hereunder, plus all other damages and remedies to which it is entitled at law or in equity. The provisions of this Article will survive termination of this LGIA.

ARTICLE 18. INDEMNITY, CONSEQUENTIAL DAMAGES AND INSURANCE

18.1 Indemnity. Each Party shall at all times indemnify, defend, and hold the other Parties harmless from, any and all Losses arising out of or resulting from another Party's action or inactions of its obligations under this LGIA on behalf of the indemnifying Party, except in cases of gross negligence or intentional wrongdoing by the Indemnified Party.

18.1.1 Indemnified Party. If an Indemnified Party is entitled to indemnification under this Article 18 as a result of a claim by a third party, and the Indemnifying Party fails, after notice and reasonable opportunity to proceed under Article 18.1, to assume the defense of such claim, such Indemnified Party may at the expense of the Indemnifying Party contest, settle or consent to the entry of any judgment with respect to, or pay in full, such claim.

18.1.2 Indemnifying Party. If an Indemnifying Party is obligated to indemnify and hold any Indemnified Party harmless under this Article 18, the amount owing to the Indemnified Party shall be the amount of such Indemnified Party’s actual Loss, net of any insurance or other recovery.

18.1.3 Indemnity Procedures. Promptly after receipt by an Indemnified Party of any claim or notice of the commencement of any action or administrative or legal proceeding or investigation as to which the indemnity provided for in Article 18.1 may apply, the Indemnified Party shall notify the Indemnifying Party of such fact. Any failure of or delay in such notification shall not affect a Party's indemnification obligation unless such failure or delay is materially prejudicial to the indemnifying Party.

The Indemnifying Party shall have the right to assume the defense thereof with counsel designated by such Indemnifying Party and reasonably satisfactory to the Indemnified Party. If the defendants in any such action

include one or more Indemnified Parties and the Indemnifying Party and if the Indemnified Party reasonably concludes that there may be legal defenses available to it and/or other Indemnified Parties which are different from or additional to those available to the Indemnifying Party, the Indemnified Party shall have the right to select separate counsel to assert such legal defenses and to otherwise participate in the defense of such action on its own behalf. In such instances, the Indemnifying Party shall only be required to pay the fees and expenses of one additional attorney to represent an Indemnified Party or Indemnified Parties having such differing or additional legal defenses.

The Indemnified Party shall be entitled, at its expense, to participate in any such action, suit or proceeding, the defense of which has been assumed by the Indemnifying Party. Notwithstanding the foregoing, the Indemnifying Party (i) shall not be entitled to assume and control the defense of any such action, suit or proceedings if and to the extent that, in the opinion of the Indemnified Party and its counsel, such action, suit or proceeding involves the potential imposition of criminal liability on the Indemnified Party, or there exists a conflict or adversity of interest between the Indemnified Party and the Indemnifying Party, in such event the Indemnifying Party shall pay the reasonable expenses of the Indemnified Party, and (ii) shall not settle or consent to the entry of any judgment in any action, suit or proceeding without the consent of the Indemnified Party, which shall not be unreasonably withheld, conditioned or delayed.

18.2 Consequential Damages. Other than the liquidated damages heretofore described in Article 5.3, in no event shall any Party be liable under any provision of this LGIA for any losses, damages, costs or expenses for any special, indirect, incidental, consequential, or punitive damages, including but not limited to loss of profit or revenue, loss of the use of equipment, cost of capital, cost of temporary equipment or services, whether based in whole or in part in contract, in tort, including negligence, strict liability, or any other theory of liability; provided, however, that damages for which a Party may be liable to another Party under another agreement will not be considered to be special, indirect, incidental, or consequential damages hereunder.

18.3 Insurance. Each Party shall, at its own expense, maintain in force throughout the period of this LGIA, and until released by the other Parties, the following minimum insurance coverages, with insurers rated no less than A- (with a minimum size rating of VII) by Bests' Insurance Guide and Key Ratings and authorized to do business in the state where the Point of Interconnection is located, except in the case of the CAISO, the State of California:

18.3.1 Employer's Liability and Workers' Compensation Insurance providing statutory benefits in accordance with the laws and regulations of the

state in which the Point of Interconnection is located, except in the case of the CAISO, the State of California.

18.3.2 Commercial General Liability Insurance including premises and operations, personal injury, broad form property damage, broad form blanket contractual liability coverage (including coverage for the contractual indemnification) products and completed operations coverage, coverage for explosion, collapse and underground hazards, independent contractors coverage, coverage for pollution to the extent normally available and punitive damages to the extent normally available and a cross liability endorsement, with minimum limits of One Million Dollars ($1,000,000) per occurrence/One Million Dollars ($1,000,000) aggregate combined single limit for personal injury, bodily injury, including death and property damage.

18.3.3 Business Automobile Liability Insurance for coverage of owned and non-owned and hired vehicles, trailers or semi-trailers designed for travel on public roads, with a minimum, combined single limit of One Million Dollars ($1,000,000) per occurrence for bodily injury, including death, and property damage.

18.3.4 Excess Public Liability Insurance over and above the Employer's Liability Commercial General Liability and Business Automobile Liability Insurance coverage, with a minimum combined single limit of Twenty Million Dollars ($20,000,000) per occurrence/Twenty Million Dollars ($20,000,000) aggregate.

18.3.5 The Commercial General Liability Insurance, Business Automobile Insurance and Excess Public Liability Insurance policies shall name the other Parties, their parents, associated and Affiliate companies and their respective directors, officers, agents, servants and employees ("Other Party Group") as additional insured. All policies shall contain provisions whereby the insurers waive all rights of subrogation in accordance with the provisions of this LGIA against the Other Party Group and provide thirty (30) Calendar Days advance written notice to the Other Party Group prior to anniversary date of cancellation or any material change in coverage or condition.

18.3.6 The Commercial General Liability Insurance, Business Automobile Liability Insurance and Excess Public Liability Insurance policies shall contain provisions that specify that the policies are primary and shall apply to such extent without consideration for other policies separately carried and shall state that each insured is provided coverage as though a separate policy had been issued to each, except the insurer’s liability shall not be increased beyond the amount for which the insurer would have been liable had only one insured been covered. Each Party shall

be responsible for its respective deductibles or retentions.

18.3.7 The Commercial General Liability Insurance, Business Automobile Liability Insurance and Excess Public Liability Insurance policies, if written on a Claims First Made Basis, shall be maintained in full force and effect for two (2) years after termination of this LGIA, which coverage may be in the form of tail coverage or extended reporting period coverage if agreed by the Parties.

18.3.8 The requirements contained herein as to the types and limits of all insurance to be maintained by the Parties are not intended to and shall not in any manner, limit or qualify the liabilities and obligations assumed by the Parties under this LGIA.

18.3.9 Within ten (10) Calendar Days following execution of this LGIA, and as soon as practicable after the end of each fiscal year or at the renewal of the insurance policy and in any event within ninety (90) Calendar Days thereafter, each Party shall provide certification of all insurance required in this LGIA, executed by each insurer or by an authorized representative of each insurer.

18.3.10 Notwithstanding the foregoing, each Party may self-insure to meet the minimum insurance requirements of Articles 18.3.2 through 18.3.8 to the extent it maintains a self-insurance program; provided that, such Party's senior unsecured debt or issuer rating is BBB-, or better, as rated by Standard & Poor's and that its self-insurance program meets the minimum insurance requirements of Articles 18.3.2 through 18.3.8. For any period of time that a Party's senior unsecured debt rating and issuer rating are both unrated by Standard & Poor's or are both rated at less than BBB- by Standard & Poor's, such Party shall comply with the insurance requirements applicable to it under Articles 18.3.2 through 18.3.9. In the event that a Party is permitted to self-insure pursuant to this Article 18.3.10, it shall notify the other Parties that it meets the requirements to self-insure and that its self-insurance program meets the minimum insurance requirements in a manner consistent with that specified in Article 18.3.9.

18.3.11 The Parties agree to report to each other in writing as soon as practical all accidents or occurrences resulting in injuries to any person, including death, and any property damage arising out of this LGIA.

ARTICLE 19. ASSIGNMENT

19.1 Assignment. This LGIA may be assigned by a Party only with the written consent of the other Parties; provided that a Party may assign this LGIA without

the consent of the other Parties to any Affiliate of the assigning Party with an equal or greater credit rating and with the legal authority and operational ability to satisfy the obligations of the assigning Party under this LGIA; and provided further that the Interconnection Customer shall have the right to assign this LGIA, without the consent of the CAISO or Participating TO, for collateral security purposes to aid in providing financing for the Large Generating Facility, provided that the Interconnection Customer will promptly notify the CAISO and Participating TO of any such assignment. Any financing arrangement entered into by the Interconnection Customer pursuant to this Article will provide that prior to or upon the exercise of the secured party's, trustee's or mortgagee's assignment rights pursuant to said arrangement, the secured creditor, the trustee or mortgagee will notify the CAISO and Participating TO of the date and particulars of any such exercise of assignment right(s), including providing the CAISO and Participating TO with proof that it meets the requirements of Articles 11.5 and 18.3. Any attempted assignment that violates this Article is void and ineffective. Any assignment under this LGIA shall not relieve a Party of its obligations, nor shall a Party's obligations be enlarged, in whole or in part, by reason thereof. Where required, consent to assignment will not be unreasonably withheld, conditioned or delayed.

ARTICLE 20. SEVERABILITY

20.1 Severability. If any provision in this LGIA is finally determined to be invalid, void or unenforceable by any court or other Governmental Authority having jurisdiction, such determination shall not invalidate, void or make unenforceable any other provision, agreement or covenant of this LGIA; provided that if the Interconnection Customer (or any third party, but only if such third party is not acting at the direction of the Participating TO or CAISO) seeks and obtains such a final determination with respect to any provision of the Alternate Option (Article 5.1.2), or the Negotiated Option (Article 5.1.4), then none of the provisions of Article 5.1.2 or 5.1.4 shall thereafter have any force or effect and the Parties' rights and obligations shall be governed solely by the Standard Option (Article 5.1.1).

ARTICLE 21. COMPARABILITY

21.1 Comparability. The Parties will comply with all applicable comparability and code of conduct laws, rules and regulations, as amended from time to time.

ARTICLE 22. CONFIDENTIALITY

22.1 Confidentiality. Confidential Information shall include, without limitation, all information relating to a Party's technology, research and development, business

affairs, and pricing, and any information supplied by any of the Parties to the other Parties prior to the execution of this LGIA.

Information is Confidential Information only if it is clearly designated or marked in writing as confidential on the face of the document, or, if the information is conveyed orally or by inspection, if the Party providing the information orally informs the Parties receiving the information that the information is confidential.

If requested by any Party, the other Parties shall provide in writing, the basis for asserting that the information referred to in this Article 22 warrants confidential treatment, and the requesting Party
may disclose such writing to the appropriate Governmental Authority. Each Party shall be responsible for the costs associated with affording confidential treatment to its information.

22.1.1 Term. During the term of this LGIA, and for a period of three (3) years after the expiration or termination of this LGIA, except as otherwise provided in this Article 22, each Party shall hold in confidence and shall not disclose to any person Confidential Information.

22.1.2 Scope. Confidential Information shall not include information that the receiving Party can demonstrate: (1) is generally available to the public other than as a result of a disclosure by the receiving Party; (2) was in the lawful possession of the receiving Party on a non-confidential basis before receiving it from the disclosing Party; (3) was supplied to the receiving Party without restriction by a third party, who, to the knowledge of the receiving Party after due inquiry, was under no obligation to the disclosing Party to keep such information confidential; (4) was independently developed by the receiving Party without reference to Confidential Information of the disclosing Party; (5) is, or becomes, publicly known, through no wrongful act or omission of the receiving Party or Breach of this LGIA; or (6) is required, in accordance with Article 22.1.7 of this LGIA, Order of Disclosure, to be disclosed by any Governmental Authority or is otherwise required to be disclosed by law or subpoena, or is necessary in any legal proceeding establishing rights and obligations under this LGIA. Information designated as Confidential Information will no longer be deemed confidential if the Party that designated the information as confidential notifies the other Parties that it no longer is confidential.

22.1.3 Release of Confidential Information. No Party shall release or disclose Confidential Information to any other person, except to its employees, consultants, Affiliates (limited by the Standards of Conduct requirements set forth in Part 358 of FERC's Regulations, 18 C.F.R. 358), subcontractors, or to parties who may be or considering providing financing to or equity participation with the Interconnection Customer, or to potential purchasers or assignees of the Interconnection Customer, on a

need-to-know basis in connection with this LGIA, unless such person has first been advised of the confidentiality provisions of this Article 22 and has agreed to comply with such provisions. Notwithstanding the foregoing, a Party providing Confidential Information to any person shall remain primarily responsible for any release of Confidential Information in contravention of this Article 22.

22.1.4 Rights. Each Party retains all rights, title, and interest in the Confidential Information that each Party discloses to the other Parties. The disclosure by each Party to the other Parties of Confidential Information shall not be deemed a waiver by a Party or any other person or entity of the right to protect the Confidential Information from public disclosure.

22.1.5 No Warranties. The mere fact that a Party has provided Confidential Information does not constitute a warranty or representation as to its accuracy or completeness. In addition, by supplying Confidential Information, no Party obligates itself to provide any particular information or Confidential Information to the other Parties nor to enter into any further agreements or proceed with any other relationship or joint venture.

22.1.6 Standard of Care. Each Party shall use at least the same standard of care to protect Confidential Information it receives as it uses to protect its own Confidential Information from unauthorized disclosure, publication or dissemination. Each Party may use Confidential Information solely to fulfill its obligations to the other Parties under this LGIA or its regulatory requirements.

22.1.7 Order of Disclosure. If a court or a Government Authority or entity with the right, power, and apparent authority to do so requests or requires any Party, by subpoena, oral
deposition, interrogatories, requests for production of documents, administrative order, or otherwise, to disclose Confidential Information, that Party shall provide the other Parties with prompt notice of such request(s) or requirement(s) so that the other Parties may seek an appropriate protective order or waive compliance with the terms of this LGIA. Notwithstanding the absence of a protective order or waiver, the Party may disclose such Confidential Information which, in the opinion of its counsel, the Party is legally compelled to disclose. Each Party will use Reasonable Efforts to obtain reliable assurance that confidential treatment will be accorded any Confidential Information so furnished.

22.1.8 Termination of Agreement. Upon termination of this LGIA for any reason, each Party shall, within ten (10) Calendar Days of receipt of a written request from another Party, use Reasonable Efforts to destroy, erase, or delete (with such destruction, erasure, and deletion certified in writing to the other Party) or return to the other Party, without retaining

copies thereof, any and all written or electronic Confidential Information received from the other Party.

22.1.9 Remedies. The Parties agree that monetary damages would be inadequate to compensate a Party for another Party's Breach of its obligations under this Article 22. Each Party accordingly agrees that the other Parties shall be entitled to equitable relief, by way of injunction or otherwise, if the first Party Breaches or threatens to Breach its obligations under this Article 22, which equitable relief shall be granted without bond or proof of damages, and the receiving Party shall not plead in defense that there would be an adequate remedy at law. Such remedy shall not be deemed an exclusive remedy for the Breach of this Article 22, but shall be in addition to all other remedies available at law or in equity. The Parties further acknowledge and agree that the covenants contained herein are necessary for the protection of legitimate business interests and are reasonable in scope. No Party, however, shall be liable for indirect, incidental, or consequential or punitive damages of any nature or kind resulting from or arising in connection with this Article 22.

22.1.10 Disclosure to FERC, its Staff, or a State. Notwithstanding anything in this Article 22 to the contrary, and pursuant to 18 C.F.R. section 1b.20, if FERC or its staff, during the course of an investigation or otherwise, requests information from one of the Parties that is otherwise required to be maintained in confidence pursuant to this LGIA, the Party shall provide the requested information to FERC or its staff, within the time provided for in the request for information. In providing the information to FERC or its staff, the Party must, consistent with 18 C.F.R. section 388.112, request that the information be treated as confidential and non-public by FERC and its staff and that the information be withheld from public disclosure. Parties are prohibited from notifying the other Parties to this LGIA prior to the release of the Confidential Information to FERC or its staff. The Party shall notify the other Parties to the LGIA when it is notified by FERC or its staff that a request to release Confidential Information has been received by FERC, at which time any of the Parties may respond before such information would be made public, pursuant to 18 C.F.R. Section 388.112. Requests from a state regulatory body conducting a confidential investigation shall be treated in a similar manner if consistent with the applicable state rules and regulations.

22.1.11 Subject to the exception in Article 22.1.10, Confidential Information shall not be disclosed by the other Parties to any person not employed or retained by the other Parties, except to the extent disclosure is (i) required by law; (ii) reasonably deemed by the disclosing Party to be required to be disclosed in connection with a dispute between or among the Parties, or the defense of litigation or dispute; (iii) otherwise permitted by consent of the other Parties, such consent not to be unreasonably withheld; or (iv)

necessary to fulfill its obligations under this LGIA or as a transmission service provider or a Balancing Authority including disclosing the Confidential Information to an RTO or ISO or to a regional or national reliability organization. The Party asserting confidentiality shall notify the other Parties in writing of the information it claims is confidential. Prior to any disclosures of another Party's Confidential Information under this subparagraph, or if any third party or Governmental Authority makes any request or demand for any of the information described in this subparagraph, the disclosing Party agrees to promptly notify the other Party in writing and agrees to assert confidentiality and cooperate with the other Party in seeking to protect the Confidential Information from public disclosure by confidentiality agreement, protective order or other reasonable measures.

ARTICLE 23. ENVIRONMENTAL RELEASES

23.1 Each Party shall notify the other Parties, first orally and then in writing, of the release of any Hazardous Substances, any asbestos or lead abatement activities, or any type of remediation activities related to the Large Generating Facility or the Interconnection Facilities, each of which may reasonably be expected to affect the other Parties. The notifying Party shall: (i) provide the notice as soon as practicable, provided such Party makes a good faith effort to provide the notice no later than twenty-four hours after such Party becomes aware of the occurrence; and (ii) promptly furnish to the other Parties copies of any publicly available reports filed with any Governmental Authorities addressing such events.

ARTICLE 24. INFORMATION REQUIREMENTS

24.1 **Information Acquisition**. The Participating TO and the Interconnection Customer shall submit specific information regarding the electrical characteristics of their respective facilities to each other as described below and in accordance with Applicable Reliability Standards.

24.2 **Information Submission by Participating TO**. The initial information submission by the Participating TO shall occur no later than one hundred eighty (180) Calendar Days prior to Trial Operation and shall include the Participating TO's Transmission System information necessary to allow the Interconnection Customer to select equipment and meet any system protection and stability requirements, unless otherwise agreed to by the Participating TO and the Interconnection Customer. On a monthly basis the Participating TO shall provide the Interconnection Customer and the CAISO a status report on the construction and installation of the Participating TO's Interconnection Facilities and Network Upgrades, including, but not limited to, the following information: (1) progress to

date; (2) a description of the activities since the last report; (3) a description of the action items for the next period; and (4) the delivery status of equipment ordered.

24.3 Updated Information Submission by Interconnection Customer. The updated information submission by the Interconnection Customer, including manufacturer information, shall occur no later than one hundred eighty (180) Calendar Days prior to the Trial Operation. The Interconnection Customer shall submit a completed copy of the Electric Generating Unit data requirements contained in Appendix 1 to the LGIP. It shall also include any additional information provided to the Participating TO and the CAISO for the Interconnection Studies. Information in this submission shall be the most current Electric Generating Unit design or expected performance data. Information submitted for stability models shall be compatible with the Participating TO and CAISO standard models. If there is no compatible model, the Interconnection Customer will work with a consultant mutually agreed to by the Parties to develop and supply a standard model and associated information.

If the Interconnection Customer's data is materially different from what was originally provided to the Participating TO and the CAISO for the Interconnection Studies, then the Participating TO and the CAISO will conduct appropriate studies pursuant to the LGIP to determine the impact on the Participating TO's Transmission System and affected portions of the CAISO Controlled Grid based on the actual data submitted pursuant to this Article 24.3. The Interconnection Customer shall not begin Trial Operation until such studies are completed and all other requirements of this LGIA are satisfied.

24.4 Information Supplementation. Prior to the Trial Operation date, the Parties shall supplement their information submissions described above in this Article 24 with any and all "as-built" Electric Generating Unit information or "as-tested" performance information that differs from the initial submissions or, alternatively, written confirmation that no such differences exist. The Interconnection Customer shall conduct tests on the Electric Generating Unit as required by Good Utility Practice such as an open circuit "step voltage" test on the Electric Generating Unit to verify proper operation of the Electric Generating Unit's automatic voltage regulator.

Unless otherwise agreed, the test conditions shall include: (1) Electric Generating Unit at synchronous speed; (2) automatic voltage regulator on and in voltage control mode; and (3) a five percent (5 percent) change in Electric Generating Unit terminal voltage initiated by a change in the voltage regulators reference voltage. The Interconnection Customer shall provide validated test recordings showing the responses of Electric Generating Unit terminal and field voltages. In the event that direct recordings of these voltages is impractical, recordings of other voltages or currents that mirror the response of the Electric Generating Unit's terminal or field voltage are acceptable if information necessary to

translate these alternate quantities to actual Electric Generating Unit terminal or field voltages is provided. Electric Generating Unit testing shall be conducted and results provided to the Participating TO and the CAISO for each individual Electric Generating Unit in a station.

Subsequent to the Commercial Operation Date, the Interconnection Customer shall provide the Participating TO and the CAISO any information changes due to equipment replacement, repair, or adjustment. The Participating TO shall provide the Interconnection Customer any information changes due to equipment replacement, repair or adjustment in the directly connected substation or any adjacent Participating TO-owned substation that may affect the Interconnection Customer's Interconnection Facilities equipment ratings, protection or operating requirements. The Parties shall provide such information pursuant to Article 5.19.

ARTICLE 25. INFORMATION ACCESS AND AUDIT RIGHTS

25.1 Information Access. Each Party (the "disclosing Party") shall make available to the other Party information that is in the possession of the disclosing Party and is necessary in order for the other Party to: (i) verify the costs incurred by the disclosing Party for which the other Party is responsible under this LGIA; and (ii) carry out its obligations and responsibilities under this LGIA. The Parties shall not use such information for purposes other than those set forth in this Article 25.1 and to enforce their rights under this LGIA. Nothing in this Article 25 shall obligate the CAISO to make available to a Party any third party information in its possession or control if making such third party information available would violate a CAISO Tariff restriction on the use or disclosure of such third party information.

25.2 Reporting of Non-Force Majeure Events. Each Party (the "notifying Party") shall notify the other Parties when the notifying Party becomes aware of its inability to comply with the provisions of this LGIA for a reason other than a Force Majeure event. The Parties agree to cooperate with each other and provide necessary information regarding such inability to comply, including the date, duration, reason for the inability to comply, and corrective actions taken or planned to be taken with respect to such inability to comply. Notwithstanding the foregoing, notification, cooperation or information provided under this Article shall not entitle the Party receiving such notification to allege a cause for anticipatory breach of this LGIA.

25.3 Audit Rights. Subject to the requirements of confidentiality under Article 22 of this LGIA, the Parties' audit rights shall include audits of a Party's costs pertaining to such Party's performance or satisfaction of obligations owed to the other Party under this LGIA, calculation of invoiced amounts, the CAISO's efforts to allocate responsibility for the provision of reactive support to the CAISO

Controlled Grid, the CAISO's efforts to allocate responsibility for interruption or reduction of generation on the CAISO Controlled Grid, and each such Party's actions in an Emergency Condition.

25.3.1 The Interconnection Customer and the Participating TO shall each have the right, during normal business hours, and upon prior reasonable notice to the other Party, to audit at its own expense the other Party's accounts and records pertaining to either such Party's performance or either such Party's satisfaction of obligations owed to the other Party under this LGIA. Subject to Article 25.3.2, any audit authorized by this Article shall be performed at the offices where such accounts and records are maintained and shall be limited to those portions of such accounts and records that relate to each such Party's performance and satisfaction of obligations under this LGIA. Each such Party shall keep such accounts and records for a period equivalent to the audit rights periods described in Article 25.4.

25.3.2 Notwithstanding anything to the contrary in Article 25.3, each Party's rights to audit the CAISO's accounts and records shall be as set forth in Section 22.1 of the CAISO Tariff.

25.4 Audit Rights Periods.

25.4.1 Audit Rights Period for Construction-Related Accounts and Records. Accounts and records related to the design, engineering, procurement, and construction of Participating TO's Interconnection Facilities, Network Upgrades, and Distribution Upgrades constructed by the Participating TO shall be subject to audit for a period of twenty-four months following the Participating TO's issuance of a final invoice in accordance with Article 12.2. Accounts and records related to the design, engineering, procurement, and construction of Participating TO's Interconnection Facilities and/or Stand Alone Network Upgrades constructed by the Interconnection Customer shall be subject to audit and verification by the Participating TO and the CAISO for a period of twenty-four months following the Interconnection Customer's issuance of a final invoice in accordance with Article 5.2(8).

25.4.2 Audit Rights Period for All Other Accounts and Records. Accounts and records related to a Party's performance or satisfaction of all obligations under this LGIA other than those described in Article 25.4.1 shall be subject to audit as follows: (i) for an audit relating to cost obligations, the applicable audit rights period shall be twenty-four months after the auditing Party's receipt of an invoice giving rise to such cost obligations; and (ii) for an audit relating to all other obligations, the applicable audit rights period shall be twenty-four months after the event for which the audit is sought; provided that each Party's rights to audit the CAISO's accounts and records shall be as set forth in Section 22.1 of the

CAISO Tariff.

25.5 Audit Results. If an audit by the Interconnection Customer or the Participating TO determines that an overpayment or an underpayment has occurred with respect to the other Party, a notice of such overpayment or underpayment shall be given to the other Party together with those records from the audit which supports such determination. The Party that is owed payment shall render an invoice to the other Party and such invoice shall be paid pursuant to Article 12 hereof.

25.5.1 Notwithstanding anything to the contrary in Article 25.5, the Interconnection Customer's and Participating TO's rights to audit the CAISO's accounts and records shall be as set forth in Section 22.1 of the CAISO Tariff, and the CAISO's process for remedying an overpayment or underpayment shall be as set forth in the CAISO Tariff.

ARTICLE 26. SUBCONTRACTORS

26.1 General. Nothing in this LGIA shall prevent a Party from utilizing the services of any subcontractor as it deems appropriate to perform its obligations under this LGIA; provided, however, that each Party shall require its subcontractors to comply with all applicable terms and conditions of this LGIA in providing such services and each Party shall remain primarily liable to the other Party for the performance of such subcontractor.

26.2 Responsibility of Principal. The creation of any subcontract relationship shall not relieve the hiring Party of any of its obligations under this LGIA. The hiring Party shall be fully responsible to the other Parties for the acts or omissions of any subcontractor the hiring Party hires as if no subcontract had been made; provided, however, that in no event shall the CAISO or Participating TO be liable for the actions or inactions of the Interconnection Customer or its subcontractors with respect to obligations of the Interconnection Customer under Article 5 of this LGIA. Any applicable obligation imposed by this LGIA upon the hiring Party shall be equally binding upon, and shall be construed as having application to, any subcontractor of such Party.

26.3 No Limitation by Insurance. The obligations under this Article 26 will not be limited in any way by any limitation of subcontractor's insurance.

ARTICLE 27. DISPUTES

All disputes arising out of or in connection with this LGIA whereby relief is sought by or from the CAISO shall be settled in accordance with the provisions of Article 13 of the CAISO Tariff, except that references to the CAISO Tariff in such Article 13 of the CAISO

Tariff shall be read as references to this LGIA. Disputes arising out of or in connection with this LGIA not subject to provisions of Article 13 of the CAISO Tariff shall be resolved as follows:

27.1 Submission. In the event either Party has a dispute, or asserts a claim, that arises out of or in connection with this LGIA or its performance, such Party (the "disputing Party") shall provide the other Party with written notice of the dispute or claim ("Notice of Dispute"). Such dispute or claim shall be referred to a designated senior representative of each Party for resolution on an informal basis as promptly as practicable after receipt of the Notice of Dispute by the other Party. In the event the designated representatives are unable to resolve the claim or dispute through unassisted or assisted negotiations within thirty (30) Calendar Days of the other Party's receipt of the Notice of Dispute, such claim or dispute may, upon mutual agreement of the Parties, be submitted to arbitration and resolved in accordance with the arbitration procedures set forth below. In the event the Parties do not agree to submit such claim or dispute to arbitration, each Party may exercise whatever rights and remedies it may have in equity or at law consistent with the terms of this LGIA.

27.2 External Arbitration Procedures. Any arbitration initiated under this LGIA shall be conducted before a single neutral arbitrator appointed by the Parties. If the Parties fail to agree upon a single arbitrator within ten (10) Calendar Days of the submission of the dispute to arbitration, each Party shall choose one arbitrator who shall sit on a three-member arbitration panel. The two arbitrators so chosen shall within twenty (20) Calendar Days select a third arbitrator to chair the arbitration panel. In either case, the arbitrators shall be knowledgeable in electric utility matters, including electric transmission and bulk power issues, and shall not have any current or past substantial business or financial relationships with any party to the arbitration (except prior arbitration). The arbitrator(s) shall provide each of the Parties an opportunity to be heard and, except as otherwise provided herein, shall conduct the arbitration in accordance with the Commercial Arbitration Rules of the American Arbitration Association ("Arbitration Rules") and any applicable FERC regulations; provided, however, in the event of a conflict between the Arbitration Rules and the terms of this Article 27, the terms of this Article 27 shall prevail.

27.3 Arbitration Decisions. Unless otherwise agreed by the Parties, the arbitrator(s) shall render a decision within ninety (90) Calendar Days of appointment and shall notify the Parties in writing of such decision and the reasons therefor. The arbitrator(s) shall be authorized only to interpret and apply the provisions of this LGIA and shall have no power to modify or change any provision of this Agreement in any manner. The decision of the arbitrator(s) shall be final and binding upon the Parties, and judgment on the award may be entered in any court having jurisdiction. The decision of the arbitrator(s) may be appealed solely on the grounds that the conduct of the arbitrator(s), or the decision itself, violated the standards set forth in the Federal Arbitration Act or the Administrative Dispute

Resolution Act. The final decision of the arbitrator must also be filed with FERC if it affects jurisdictional rates, terms and conditions of service, Interconnection Facilities, or Network Upgrades.

27.4 Costs. Each Party shall be responsible for its own costs incurred during the arbitration process and for the following costs, if applicable: (1) the cost of the arbitrator chosen by the Party to sit on the three member panel and one half of the cost of the third arbitrator chosen; or (2) one half the cost of the single arbitrator jointly chosen by the Parties.

ARTICLE 28. REPRESENTATIONS, WARRANTIES AND COVENANTS

28.1 General. Each Party makes the following representations, warranties and covenants:

28.1.1 Good Standing. Such Party is duly organized, validly existing and in good standing under the laws of the state in which it is organized, formed, or incorporated, as applicable; that it is qualified to do business in the state or states in which the Large Generating Facility, Interconnection Facilities and Network Upgrades owned by such Party, as applicable, are located; and that it has the corporate power and authority to own its properties, to carry on its business as now being conducted and to enter into this LGIA and carry out the transactions contemplated hereby and perform and carry out all covenants and obligations on its part to be performed under and pursuant to this LGIA.

28.1.2 Authority. Such Party has the right, power and authority to enter into this LGIA, to become a Party hereto and to perform its obligations hereunder. This LGIA is a legal, valid and binding obligation of such Party, enforceable against such Party in accordance with its terms, except as the enforceability thereof may be limited by applicable bankruptcy, insolvency, reorganization or other similar laws affecting creditors' rights generally and by general equitable principles (regardless of whether enforceability is sought in a proceeding in equity or at law).

28.1.3 No Conflict. The execution, delivery and performance of this LGIA does not violate or conflict with the organizational or formation documents, or bylaws or operating agreement, of such Party, or any judgment, license, permit, order, material agreement or instrument applicable to or binding upon such Party or any of its assets.

28.1.4 Consent and Approval. Such Party has sought or obtained, or, in accordance with this LGIA will seek or obtain, each consent, approval,

authorization, order, or acceptance by any Governmental Authority in connection with the execution, delivery and performance of this LGIA, and it will provide to any Governmental Authority notice of any actions under this LGIA that are required by Applicable Laws and Regulations.

ARTICLE 29. [RESERVED]

ARTICLE 30. MISCELLANEOUS

30.1 Binding Effect. This LGIA and the rights and obligations hereof, shall be binding upon and shall inure to the benefit of the successors and assigns of the Parties hereto.

30.2 Conflicts. In the event of a conflict between the body of this LGIA and any attachment, appendices or exhibits hereto, the terms and provisions of the body of this LGIA shall prevail and be deemed the final intent of the Parties.

30.3 Rules of Interpretation. This LGIA, unless a clear contrary intention appears, shall be construed and interpreted as follows: (1) the singular number includes the plural number and vice versa; (2) reference to any person includes such person's successors and assigns but, in the case of a Party, only if such successors and assigns are permitted by this LGIA, and reference to a person in a particular capacity excludes such person in any other capacity or individually; (3) reference to any agreement (including this LGIA), document, instrument or tariff means such agreement, document, instrument, or tariff as amended or modified and in effect from time to time in accordance with the terms thereof and, if applicable, the terms hereof; (4) reference to any Applicable Laws and Regulations means such Applicable Laws and Regulations as amended, modified, codified, or reenacted, in whole or in part, and in effect from time to time, including, if applicable, rules and regulations promulgated thereunder; (5) unless expressly stated otherwise, reference to any Article, Section or Appendix means such Article of this LGIA or such Appendix to this LGIA, or such Section to the LGIP or such Appendix to the LGIP, as the case may be; (6) "hereunder", "hereof", "herein", "hereto" and words of similar import shall be deemed references to this LGIA as a whole and not to any particular Article or other provision hereof or thereof; (7) "including" (and with correlative meaning "include") means including without limiting the generality of any description preceding such term; and (8) relative to the determination of any period of time, "from" means "from and including", "to" means "to but excluding" and "through" means "through and including".

30.4 Entire Agreement. This LGIA, including all Appendices and Schedules attached hereto, constitutes the entire agreement among the Parties with reference to the subject matter hereof, and supersedes all prior and contemporaneous

understandings or agreements, oral or written, between or among the Parties with respect to the subject matter of this LGIA. There are no other agreements, representations, warranties, or covenants which constitute any part of the consideration for, or any condition to, any Party's compliance with its obligations under this LGIA.

30.5 No Third Party Beneficiaries. This LGIA is not intended to and does not create rights, remedies, or benefits of any character whatsoever in favor of any persons, corporations, associations, or entities other than the Parties, and the obligations herein assumed are solely for the use and benefit of the Parties, their successors in interest and, where permitted, their assigns.

30.6 Waiver. The failure of a Party to this LGIA to insist, on any occasion, upon strict performance of any provision of this LGIA will not be considered a waiver of any obligation, right, or duty of, or imposed upon, such Party.

Any waiver at any time by either Party of its rights with respect to this LGIA shall not be deemed a continuing waiver or a waiver with respect to any other failure to comply with any other obligation, right, duty of this LGIA. Termination or Default of this LGIA for any reason by the Interconnection Customer shall not constitute a waiver of the Interconnection Customer's legal rights to obtain an interconnection from the Participating TO. Any waiver of this LGIA shall, if requested, be provided in writing.

30.7 Headings. The descriptive headings of the various Articles of this LGIA have been inserted for convenience of reference only and are of no significance in the interpretation or construction of this LGIA.

30.8 Multiple Counterparts. This LGIA may be executed in two or more counterparts, each of which is deemed an original but all constitute one and the same instrument.

30.9 Amendment. The Parties may by mutual agreement amend this LGIA by a written instrument duly executed by all of the Parties. Such amendment shall become effective and a part of this LGIA upon satisfaction of all Applicable Laws and Regulations.

30.10 Modification by the Parties. The Parties may by mutual agreement amend the Appendices to this LGIA by a written instrument duly executed by all of the Parties. Such amendment shall become effective and a part of this LGIA upon satisfaction of all Applicable Laws and Regulations.

30.11 Reservation of Rights. The CAISO and Participating TO shall each have the right to make a unilateral filing with FERC to modify this LGIA pursuant to section 205 or any other applicable provision of the Federal Power Act and FERC's rules and regulations thereunder with respect to the following Articles of this LGIA and

with respect to any rates, terms and conditions, charges, classifications of service, rule or regulation covered by these Articles:

> Recitals, 1, 2.1, 2.2, 2.3, 2.4, 2.6, 3.1, 3.3, 4.1, 4.2, 4.3, 4.4, 5 preamble, 5.4, 5.7, 5.8, 5.9, 5.12, 5.13, 5.18, 5.19.1, 7.1, 7.2, 8, 9.1, 9.2, 9.3, 9.5, 9.6, 9.7, 9.8, 9.10, 10.3, 11.4, 12.1, 13, 14, 15, 16, 17, 18, 19, 20, 21, 22, 23, 24.3, 24.4, 25.1, 25.2, 25.3 (excluding subparts), 25.4.2, 26, 28, 29, 30, Appendix D, Appendix F,and any other Article not reserved exclusively to the Participating TO or the CAISO below.

The Participating TO shall have the exclusive right to make a unilateral filing with FERC to modify this LGIA pursuant to section 205 or any other applicable provision of the Federal Power Act and FERC's rules and regulations thereunder with respect to the following Articles of this LGIA and with respect to any rates, terms and conditions, charges, classifications of service, rule or regulation covered by these Articles:

> 2.5, 5.1, 5.2, 5.3, 5.5, 5.6, 5.10, 5.11, 5.14, 5.15, 5.16, 5.17, 5.19 (excluding 5.19.1), 6, 7.3, 9.4, 9.9, 10.1, 10.2, 10.4, 10.5, 11.1, 11.2, 11.3, 11.5, 12.2, 12.3, 12.4, 24.1, 24.2, 25.3.1, 25.4.1, 25.5 (excluding 25.5.1), 27 (excluding preamble), Appendix A, Appendix B, Appendix C, and Appendix E.

The CAISO shall have the exclusive right to make a unilateral filing with FERC to modify this LGIA pursuant to section 205 or any other applicable provision of the Federal Power Act and FERC's rules and regulations thereunder with respect to the following Articles of this LGIA and with respect to any rates, terms and conditions, charges, classifications of service, rule or regulation covered by these Articles:

> 3.2, 4.5, 11.6, 25.3.2, 25.5.1, and 27 preamble.

The Interconnection Customer, the CAISO, and the Participating TO shall have the right to make a unilateral filing with FERC to modify this LGIA pursuant to section 206 or any other applicable provision of the Federal Power Act and FERC's rules and regulations thereunder; provided that each Party shall have the right to protest any such filing by another Party and to participate fully in any proceeding before FERC in which such modifications may be considered. Nothing in this LGIA shall limit the rights of the Parties or of FERC under sections 205 or 206 of the Federal Power Act and FERC's rules and regulations thereunder, except to the extent that the Parties otherwise mutually agree as provided herein.

30.12 No Partnership. This LGIA shall not be interpreted or construed to create an association, joint venture, agency relationship, or partnership among the Parties or to impose any partnership obligation or partnership liability upon any Party.

No Party shall have any right, power or authority to enter into any agreement or undertaking for, or act on behalf of, or to act as or be an agent or representative of, or to otherwise bind, another Party.

30.13 Joint and Several Obligations. Except as otherwise provided in this LGIA, the obligations of the CAISO, the Participating TO, and the Interconnection Customer are several, and are neither joint nor joint and several.

IN WITNESS WHEREOF, the Parties have executed this LGIA in multiple originals, each of which shall constitute and be an original effective agreement among the Parties.

Southern California Edison Company

By:_____

Title:_____

Date:_____

California Independent System Operator Corporation

By:_____

Title:_____

Date:_____

The Nevada Hydro Company, Inc.

By:_____

Title:_____

Date:_____

Appendices to LGIA

Appendix A Interconnection Facilities, Network Upgrades and Distribution Upgrades

Appendix B Milestones

Appendix C Interconnection Details

Appendix D Security Arrangements Details

Appendix E Commercial Operation Date

Appendix F Addresses for Delivery of Notices and Billings

Appendix G **[Not Used]**

Appendix H Interconnection Requirements for an Asynchronous Generating Facility

Appendix A
To LGIA

Interconnection Facilities, Network Upgrades and Distribution Upgrades

Within Appendix A of this LGIA, the Parties have identified and characterized certain interconnection components of the interconnection configuration as one of three types: i) Network Upgrades, ii) Interconnection Facilities, or iii) Distribution Upgrades. Studies conducted by the Parties during the Interconnection Study process associated with this LGIA analyzed these components as they are currently configured. Any determinations of need for these components made by the CAISO up to the date this LGIA is executed, or up to the date this LGIA is filed unexecuted at the Federal Energy Regulatory Commission, are limited to their current configurations.

1) **Interconnection Facilities:**

a) **Interconnection Customer's Interconnection Facilities:**

i) Interconnection Customer's Interconnection Facilities consist of one interconnection position in the Interconnection Customer's 500 kV switchrack located in the Interconnection Customer's proposed LEAPS Substation, using a one and a half circuit breaker configuration, two 500 kV circuit breakers, associated meters, metering equipment, protective relays disconnects, associated 500 kV generation tie-line ("Alberhill-LEAPS 500 kV Generation Tie-Line"), and appurtenant facilities.

ii) In additional to the above, the Interconnection Customer shall:

(1) Construct the Alberhill-LEAPS 500 kV Generation Tie-Line, approximately fifteen circuit miles from the LEAPS Generating Facility substation to the last structure owned by the Interconnection Customer outside of and nearest to the perimeter fence of the Alberhill Substation.

(2) Install optical ground wire ("OPGW") to provide the telecommunication path required for the line protection and one of the two telecommunication paths required for the SPS.

(3) Install all required CAISO-approved compliant metering at the LEAPS Generating Facility.

(4) Provide a metering cubicle for the Participating TO to install its retail metering equipment and related meters. Such cubicle must be placed at a location that would allow twenty-four hour access for the Participating TO's metering personnel.

(5) Install the following line protection relays at the termination point of the Alberhill-LEAPS 500 kV Generation Tie-Line at the Interconnection Customer's 500 kV switchyard, as specified by the Participating TO:

(a) Two GE C60 breaker management relays.
(b) One SEL-311L line current differential (digital F.O. channel).
(c) One GE L90 line current differential (digital F. O. channel).
(d) One GE D60 directional comparison pilot relaying (digital F.O./MW channel).
(e) One RFL 9745 tele-protection channel DTT (digital F.O. channel).
(f) One RFL 9745 tele-protection channel DTT (M/W channel).
(g) One 32/64 digital fault recorder.
(h) One ethernet service drop.
(i) One SEL-2030 relay.
(j) Install SPS to trip Electric Generating Units at the LEAPS Generating Facility for an outage of the Alberhill-LEAPS 500 kV Generation Tie-Line when the LEAPS Generating Facility is operating in pumping mode as follows:

(i) Two G.E. N60 relays (one for SPS A and one for SPS B) for line monitoring and sending of tripping signals.
(ii) One SEL – 2407 satellite synchronized clock.
(iii) The SPS will use the same telecommunication channels to be installed between Alberhill Substation and the LEAPS 500kV Switchyard to support the line protection requirements on the Alberhill – LEAPS 500kV Generation Tie-Line, so no additional channels are required.

(6) Provide adequate space and power sources within the Interconnection Customer's facilities for the installation of the Participating TO's telecommunication terminal equipment interfacing with the Interconnection Customer's Alberhill-LEAPS 500 kV Generation Tie-Line protection and SPS relays described in Section 1(a)(iii)(5) above and the Participating TO's remote terminal unit ("RTU") installed at the LEAPS Generating Facility.
(7) Install disconnect facilities in accordance with the Participating TO's Interconnection Handbook to comply with the Participating TO's switching and tagging procedures.

b) **Participating TO's Interconnection Facilities:** The Participating TO shall perform the following work pursuant to Article 11.2 of the LGIA:

i) Alberhill Substation:

(1) Install new telecommunication equipment to support the Alberhill-LEAPS 500 kV Generation Tie-Line protection, SCADA and the Participating TO's applicable voice and data requirements.
(2) Install new fiber optic cable to extend the Participating TO's existing fiber optic cable to the LEAPS Generating Facility. The combined (existing + new) fiber optic cable provides the required alternate route between Alberhill Substation and the LEAPS Generating Facility.
(3) Protection Relays: Install the following relay protection devices for the Alberhill-LEAPS 500 kV Generation Tie-Line protection.
(a) Two GE C60 breaker management relays.
(b) One SEL-311L line current differential (digital F.O. channel).
(c) One GE L90 line current differential (digital F. O. channel).
(d) One GE D60 directional comparison pilot relaying (digital F.O./MW channel).
(e) One RFL 9745 tele-protection channel DTT (digital F.O. channel).
(f) One RFL 9745 tele-protection channel DTT (M/W channel).
(g) One 32/64 digital fault recorder.
(h) One Ethernet service drop.
(i) One SEL-2030 relay.
(j) Install SPS to trip Electric Generating Units at the LEAPS Generating Facility for an outage of the Alberhill-LEAPS 500 kV Generation Tie-Line when the LEAPS Generating Facility is operating in pumping mode as follows:
(i) Two G.E. N60 relays (one for SPS A and one for SPS B) for line monitoring and sending of tripping signals.
(ii) One SEL – 2407 satellite synchronized clock.
The SPS will use the same telecommunication channels to be installed between Alberhill Substation and the LEAPS 500kV Switchyard to support the line protection requirements on the Alberhill – LEAPS 500kV Generation Tie-Line, so no additional channels are required.
(4) Other Station Elements to be Installed:
(a) Microwave antenna for communications.
(b) Dual communication channels on separate routes to support the line protection relays on the Alberhill-LEAPS 500 kV Generation Tie-Line. One of the communication channels will be provided by installing OPGW on the new Alberhill-LEAPS 500 kV Generation Tie-Line.

(c) Towers, line drop, and appurtenant facilities to interconnect the Alberhill-LEAPS 500 kV Generation Tie-Line.
(d) Retail meters and metering facilities.

ii) LEAPS Generating Facility:
(1) Install new telecommunication equipment to support the Alberhill-LEAPS 500 kV Generation Tie-Line protection, SCADA, and the Participating TO's applicable voice and data requirements. Notwithstanding the fact that such new telecommunication equipment will be located on the Interconnection Customer's side of the Point of Change of Ownership, such equipment will be owned and maintained by the Participating TO.
(2) Install an RTU to monitor the typical generating elements such as MW, MVAR, terminal voltage and circuit breaker status at each Electric Generating Unit and the plant auxiliary load. Notwithstanding the fact that such RTU will be located on the Interconnection Customer's side of the Point of Change of Ownership, such equipment will be owned and maintained by the Participating TO.

2) Network Upgrades:

a) **Stand Alone Network Upgrades**: None.

b) **Participating TO's Reliability Network Upgrades:**

i) **Alberhill 500 kV Substation** The Participating TO shall perform the following work pursuant to Article 11.3 of the LGIA:

(1) Engineer and construct the Alberhill 500 kV Substation at the site previously known as the Horse Ranch location, which will include the following elements:

(a) An initial four bay position, breaker-and-a-half 500 kV switchyard, using Gas Insulated System ("GIS") switchgear, and provide enough space necessary to accommodate a full design build-out capability of six 500 kV bay. Initially install four bays (1, 2, 3 and 4) with 7500A, 63KA, 500-kV buses and equipped with eight 500 kV bus PTs and provide the four bays with four 4000A, 500kV line positions, including nine 500 kV circuit breakers and associated disconnects in positions 1, 2, 3, and 4.
(b) The station should allow enough space for future installation of two additional bay positions and two 500kV capacitor banks.

(2) Mechanical Electrical Equipment Room ("MEER"): Install a new MEER building of approximately 65 ft. by 70 ft. to house the following equipment:
(a) Batteries and battery charger
(b) Light and power selector switch
(c) Light and power panel
(d) A.C. distribution panel
(e) D.C. distribution panel
(f) Relay Protection
(g) Telecommunication equipment
(h) Appurtenant facilities

(3) Protection Relays:

(a) 500 kV Transmission Lines:
(i) Equip Alberhill-LEAPS 500 kV Generation Tie-Line with three 500-kV line CCVTs & three 500-kV line surge arresters. Terminate (3) 2156 KCMIL ACSR/phase conductors to 108-ft high steel dead-end. Provide adequate riser and jumper connections to the GIS riser conductors.

(ii) Equip Alberhill-Valley 500-kV Transmission Line with three 500-kV line CCVTs & three 500-kV line surge arresters. Terminate (3) 2156 KCMIL ACSR/phase conductors to 108-ft high steel dead-end. Provide adequate riser and jumper connections to the GIS riser conductors.

(iii) Equip Alberhill-Serrano 500-kV Transmission Line with three 500-kV line CCVTs & three 500-kV line surge arresters. Terminate (3) 2156 KCMIL ACSR/phase conductors to 108-ft high steel dead-end. Provide adequate riser and jumper connections to the GIS riser conductors.

(iv) Install the following relays at each of the line positions:
1. Two G.E. C60 breaker management relays.
2. One SEL-311L line current differential (digital F.O. channel).
3. One G.E. L90 line current differential (digital F.O. channel).
4. One G.E. D 60 directional comparison pilot relaying (digital F.O./MW channel).
5. One RFL 9745 tele-protection channel DTT (digital F.O. channel).
6. One RFL 9745 tele-protection channel DTT (MW channel).

(b) Other Protection Devices:
(i) Install one 32/64 digital fault recorder.
(ii) Install one Ethernet service drop.
(iii) Install one SEL-2030 connected to all three SEL-311L relays.

(4) Other Station Elements to be Installed:
(a) Telecommunications tower and MW dish antenna.
(b) Perimeter fence with double barbed wire and a double door 20-ft. gate around the substation.
(c) Grounding grid to cover the substation area and additional 10-ft. outside the perimeter fence.
(d) Perform grading and site preparation for the substation area and additional 10-ft. outside the perimeter fence.
(e) 25-ft. wide paved driveway around both the 500 kV and 115 kV switchyards and the transformer banks with a branch of driveway to provide access to the relay room.
(f) All required control cable trenches from the relay room to the 500 kV switchyard.
(g) Install the necessary equipment, including one RTU to monitor the typical bulk power elements such as MW, MVAR, and phase amps at each line and also kV at lines and buses and all circuit breaker status/control, protection relays status and alarms. The installed equipment will transmit information to the Participating TO's Grid Control Center.

ii) Serrano – Valley 500 kV Transmission Line: Loop the existing Serrano-Valley 500 kV Transmission Line into Alberhill Substation and form two new lines: Alberhill-Serrano and Alberhill Valley 500 kV Transmission Lines. This work requires the installation of new dead-end steel structures at the tie-in locations along with related line hardware and conductors. From the tie-in locations, the lines will continue to the proposed new Alberhill Substation site. Note: Numerous routing alternatives exist for the lines connecting the tie-in locations to the Alberhill Substation site. They range in length from 1.5 to 2.5 miles per connecting line. These lines go over rocky and hilly terrain with numerous major turns. Single circuit towers are under consideration for this project. The project may need sixteen towers.

iii) Substations:

(a) Serrano Substation:
(i) Upgrade the Serrano-Valley 500 kV line protection as needed to change the line to the Alberhill-Serrano 500 kV Transmission Line.
(ii) Replace the existing LFCB relay with a new SEL-311L line current differential relay and modify the existing D60 and L90 relays to change the existing transfer trip schemes from Serrano Substation to Alberhill Substation.

(iii) Reconfigure the existing digital channel from Serrano Substation to Alberhill Substation and modify the existing SEL 2030 telecommunications processor with Ethernet to provide connection to the new SEL relay.

(b) Valley Substation:

(i) Upgrade the Serrano-Valley 500 kV line protection as needed to change the line to the Alberhill-Valley 500 kV transmission line.
(ii) Replace the existing LFCB relay with a new SEL-311L line current differential relay and modify the existing D60 and L90 relays to change the existing transfer trip schemes from Valley Substation to Alberhill Substation.
(iii) Reconfigure the existing digital channel from Valley Substation to Alberhill Substation and modify the existing SEL 2030 telecommunications processor with Ethernet to provide connection to the new SEL relay.

(c) Etiwanda Generating Station:

(i) Replace the 2000A wave trap on the Vista 220 kV line position with 3000A rated wave trap, with N-2 contingency rating of 3210A to support the maximum N-2 line loading of 3071A.
(ii) Replace twenty-four 63 kA 220 kV circuit breakers with new 80 kA rated circuit breakers and upgrade the Etiwanda 220 kV switchyard to 80 kA rating.
(iii) The scope of work for the switchyard upgrade has not been completed at this time. A scope of work and cost estimate has been prepared for the upgrade of a similar facility. At this time it is expected that the type of upgrades for this location would be very similar to those already scoped and estimated for the similar facility. Based on this assumption, it is expected that, in addition to the work shown in 2(c)(i) and 2(c)(ii) above, the following additional upgrades would be required:
1. Replace twenty-four 220 kV surge arresters.
2. Replace all line and bank vertical risers with tubular conductors.
3. Replace all 4/0 CU connectors to the ground grid with connectors compatible with 350 MCM bare copper conductor.
4. Install new sections of 350 MCM bare copper wire and interconnect with the 4/0 CU ground grid.
5. Install four gas insulated grounding switches.

iv) Telecommunications:

(a) Install new telecommunication equipment on separate routes to support the line protection relays on the Alberhill-Serrano and Alberhill-Valley 500 kV Transmission Lines. The new telecommunication equipment will be installed at Alberhill, Serrano, Valley, and Mira Loma Substations, as well as Santiago Peak communications site.

v) Corporate Real Estate: Survey the area surrounding Alberhill Substation and the 500 kV line loop and prepare topographical maps and line profiles to support the engineering and design activities.

vi) Permitting Activities: All work associated with obtaining the required permits, including the Certificate of Public Convenience and Necessity ("CPCN") with the California Public Utilities Commission.

vii) Valley-Serrano 500 kV line cutover: Design, engineer, construct and install the final towers associated with the line loop from the Valley-Serrano 500 kV line to Alberhill Substation, and cut over the Valley-Serrano 500 kV line to Alberhill Substation.

c) **Participating TO's Delivery Network Upgrades: None**

3) **Distribution Upgrades:** The Participating TO shall perform the following work pursuant to Article 11.3 of the LGIA:

a) **Valley Substation**: Replace six 31.5 kA 115 kV circuit breakers with new 40 kA rated circuit breakers and upgrade six 31.5 kA circuit breakers to 40 kA.

b) **Alberhill 115 kV Substation:** Notwithstanding Article 11.3 of the LGIA, if the Participating TO elects to construct the Alberhill 115 kV Substation, the Participating TO shall fund the Distribution Upgrades described in this Subsection 3(b). However, if the Participating TO elects not to construct such Distribution Upgrades described in this Section 3(b), then the LGIA will be amended to reflect the revised scope of work, costs, milestone schedule and payment schedule:

i) Engineer and construct the new Alberhill 115 kV Substation based on the one-line diagram specified in Section 6 below which will include the following elements:
(1) One 115 kV open air switchrack as shown on the one-line diagram specified in Section 6 below, with five breaker–and–a-half positions with enough available space to allow the future installation of five additional positions.
(2) Two outdoor type 500/115kV, 560 MVA transformer banks with enough space to allow a future addition of two more 500/115 kV, 560 MVA units for a total of four banks.
(3) The station will allow enough space for future installation of two 115kV capacitor banks.
(4) Protection equipment to support the 115 kV system requirements.
(5) Perimeter fence, grounding grid, grading, driveways, and cable trenches to support its operation and maintenance.

4) **Point of Change of Ownership:** The point where the conductors of the Alberhill–LEAPS 500 kV Generation Tie-Line are attached to the first structure located directly outside the Alberhill 500 kV Substation property line. This would be the side of the structure facing the substation. The Interconnection Customer shall own and maintain said structure, and the conductors connecting this structure with the second structure located outside Alberhill Substation, including the jumper loop. The Participating TO shall own and maintain the Alberhill 500 kV Substation, the Alberhill 500/115 kV Substation, Valley-Serrano line loop, rights-of-way associated with the Valley-Serrano line loop, all circuit breakers, disconnects, relay facilities, metering within the substation, land, and the line drops in their entirety from the point they are attached to the first structure outside the substation's property line. The Participating TO shall own the insulators that are used to attach the Participating TO-owned conductors to the Interconnection Customer-owned structure.

5) Point of Interconnection: Participating TO's Alberhill Substation 500 kV bus.

6) One-Line Diagram of Interconnection to Alberhill Substation:

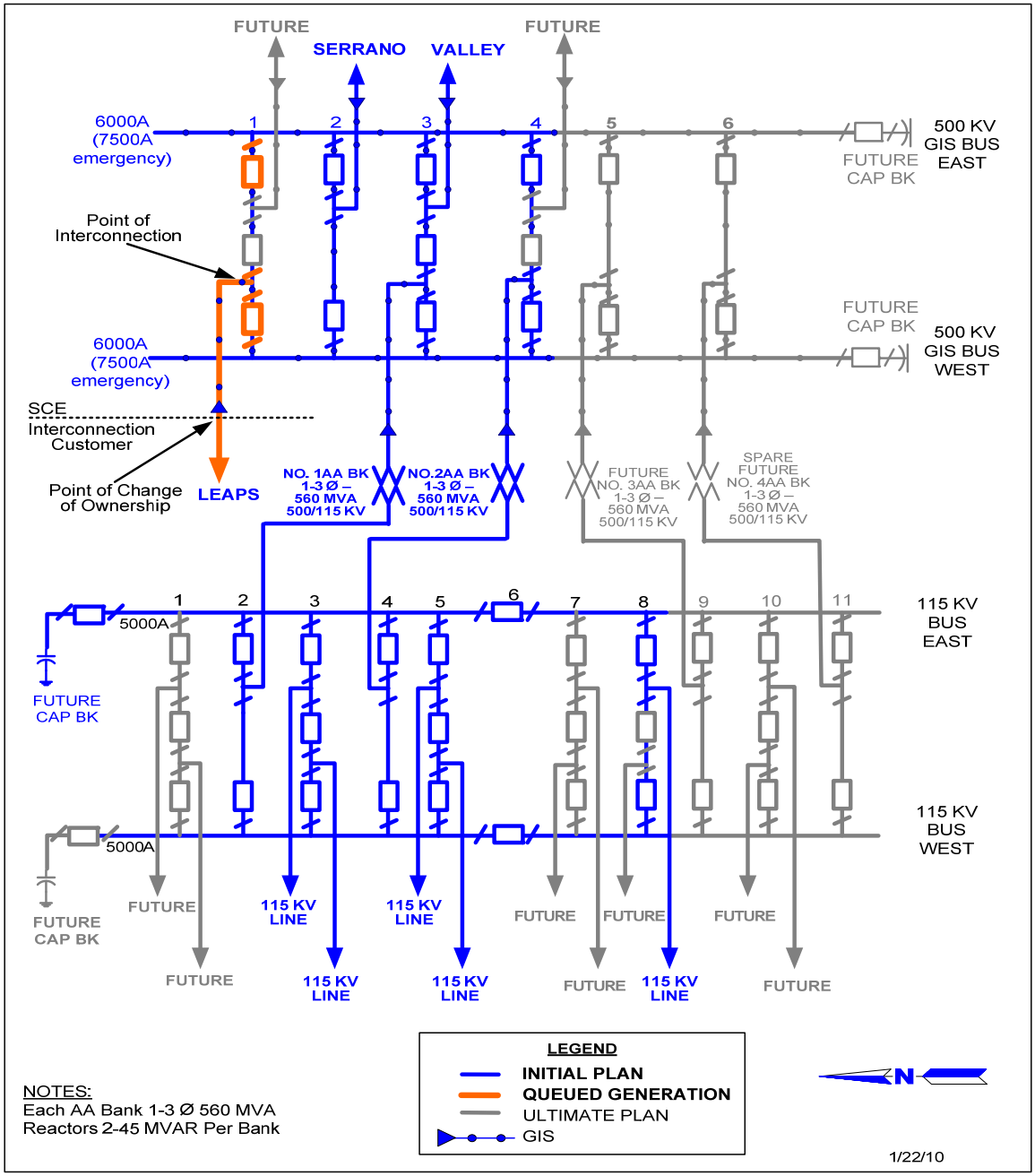

Note: The LEAPS Generating Facility is proposed to be connected to the Participating TO's Alberhill Substation Project. This substation project is still under development as part of the long-term transmission plan and has been approved by the CAISO Board. Also, a CPCN for the Alberhill 500/115 KV Substation and Valley/Serrano Line loop has been filed at the CPUC. In the event that SCE modifies its plan for the Alberhill 500/115 kV Substation, or the substation project does not receive CPUC approval, then the Participating TO would develop an alternate plan to connect the Generating Facility to the Valley – Serrano 500kV Transmission Line. The alternate plan for connection to the Valley-Serrano 500kV Transmission Line may be subject to CPUC review and concurrence if this information has not yet been evaluated as part of the LGIP review process.

7) **Transmission Credits:** The Interconnection Customer may elect, pursuant to Article 11.4 of the LGIA, to receive Congestion Revenue Rights in lieu of repayment of the applicable amounts

advanced for the costs of the Network Upgrades as transmission credits. The transmission credits will equal the sum of the Delivery Network Upgrades Payment and the Reliability Network Upgrades Payment as shown in Section 17 of this Appendix A.

8) **Interconnection Studies:** Operational Study**:** As was identified in the Interconnection Facilities Study report, an operational study will be required one year prior to the interconnection of the LEAPS Generating Facility due to the changes in the generation interconnection queue and the transmission system since the Interconnection Facilities Study was completed. This study may identify Participating TO's Reliability Network Upgrades and Participating TO's Delivery Network Upgrades that are diff**e**rent from those included in the LGIA.

9) **Security Amount for the Participating TO's Interconnection Facilities, Distribution Upgrades, and Network Upgrades:**

a) Pursuant to Article 11.5 and Appendix B of the LGIA, and subject to the security posting timeline set forth in Table B.1 of Appendix B, the Interconnection Customer shall:
   i) Provide Credit Support in the amount of $5,116,734.00 in accordance with the table shown in Appendix A, Section 9(b), to cover the costs for constructing, procuring and installing the Participating TO's Interconnection Facilities. The disposition of any released Credit Support shall be directed by the Interconnection Customer.
   ii) Provide Credit Support in the amount of $61,976,185.00 in accordance with the table shown in Appendix A, Section 9(d), to cover the costs for constructing, procuring and installing the Participating TO's Network Upgrades. The disposition of any released Credit Support shall be directed by the Interconnection Customer.
   iii) Provide Credit Support in the amount of $2,876,845.00 in accordance with the table shown in Appendix A, Section 9(c), to cover the costs for constructing, procuring and installing the Participating TO's Distribution Upgrades. The disposition of any released Credit Support shall be directed by the Interconnection Customer.

(b) The Participating TO will accept Credit Support for the Participating TO's Interconnection Facilities in the form of a guarantee, a surety bond, letter of credit or other form of security that is reasonably acceptable to the Participating TO and is consistent with the Uniform Commercial Code of the applicable jurisdiction. The Interconnection Customer shall provide to the Participating TO, the Credit Support, posted as follows and maintained pursuant to Article 11.5 of the LGIA:

• Date Due*	Credit Support Amount
• 7/1/2015	$50,643.00
• 10/1/2015	$78,036.00
• 1/1/2016	$121,307.00
• 4/1/2016	$179,506.00
• 7/1/2016	$256,281.00
• 10/1/2016	$347,777.00
• 1/1/2017	$451,585.00
• 4/1/2017	$525,299.00
• 7/1/2017	$553,380.00
• 10/1/2017	$525,299.00
• 1/1/2018	$463,189.00
• 4/1/2018	$365,453.00
• 7/1/2018	$269,306.00
• 10/1/2018	$188,629.00
• 1/1/2019	$131,029.00
• 4/1/2019	$86,415.00
• 7/1/2019	$56,081.00

• 10/1/2019	$13,830.00

(c) The Participating TO will accept Credit Support for the Participating TO's Distribution Upgrades in the form of a guarantee, a surety bond, letter of credit or other form of security that is reasonably acceptable to the Participating TO and is consistent with the Uniform Commercial Code of the applicable jurisdiction. The Credit Support must be satisfied by an entity that meets the creditworthiness requirement of the Participating TO. The Interconnection Customer shall provide to the Participating TO, the Credit Support, posted as follows and maintained pursuant to Article 11.5 of the LGIA:

• Date Due*	Credit Support Amount
• 7/1/2015	$28,473.00
• 10/1/2015	$43,875.00
• 1/1/2016	$68,203.00
• 4/1/2016	$100,926.00
• 7/1/2016	$144,091.00
• 10/1/2016	$195,534.00
• 1/1/2017	$253,899.00
• 4/1/2017	$295,344.00
• 7/1/2017	$311,133.00
• 10/1/2017	$295,344.00
• 1/1/2018	$260,424.00
• 4/1/2018	$205,473.00
• 7/1/2018	$151,414.00
• 10/1/2018	$106,056.00
• 1/1/2019	$73,669.00
• 4/1/2019	$48,586.00
• 7/1/2019	$31,531.00
• 10/1/2019	$7,775.00

(d) The Participating TO will accept Credit Support for the Participating TO's Network Upgrades in the form of a guarantee, a surety bond, letter of credit or other form of security that is reasonably acceptable to the Participating TO and is consistent with the Uniform Commercial Code of the applicable jurisdiction. The Credit Support must be satisfied by an entity that meets the creditworthiness requirement of the Participating TO. The Interconnection Customer shall provide to the Participating TO, the Credit Support, posted as follows and maintained pursuant to Article 11.5 of the LGIA:

• Date Due*	Credit Support Amount
• 7/1/2015	$613,407.00
• 10/1/2015	$945,211.00
• 1/1/2016	$1,469,303.00
• 4/1/2016	$2,174,247.00
• 7/1/2016	$3,104,171.00
• 10/1/2016	$4,212,416.00
• 1/1/2017	$5,469,783.00
• 4/1/2017	$6,362,631.00
• 7/1/2017	$6,702,767.00
• 10/1/2017	$6,362,631.00
• 1/1/2018	$5,610,356.00
• 4/1/2018	$4,426,533.00

• 7/1/2018	$3,261,954.00
• 10/1/2018	$2,284,763.00
• 1/1/2019	$1,587,062.00
• 4/1/2019	$1,046,692.00
• 7/1/2019	$679,267.00
• 10/1/2019	$167,507.00

* The due dates for Interconnection Customer to provide Credit Support are subject to change should the milestone dates set forth in Appendix B change.

10) **Security Amount for Estimated Tax Liability:** Pursuant to Article 5.17.4 of the LGIA, the Interconnection Customer's estimated tax liability shall be calculated as follows:

(Current Tax Rate x (Gross Income Amount – Present Value of Tax Depreciation))/(1 – Current Tax Rate) = 35%

Estimated tax liability for Participating TO's Interconnection Facilities and Distribution Upgrades = (35% x (Interconnection Facilities Cost + Distribution Upgrades Cost)) = (35% x ($4,663,045.00+$2,621,750.00) = $2,549,678.25

Interconnection Facilities Cost = $4,663,045.00

Distribution Upgrades Cost = $2,621,750.00

Based upon the estimated tax liability, the Interconnection Customer shall provide Credit Support to the Participating TO in the form of a guarantee, a surety bond, letter of credit or other form of security that is reasonably acceptable to the Participating TO and is consistent with the Uniform Commercial Code of the applicable jurisdiction.

The security must be made by an entity that meets the creditworthiness requirement of the Participating TO. The Interconnection Customer shall provide to the Participating TO security, pursuant to Article 5.17.3 and Appendix B of the LGIA, posted as follows:

• Date Due*	Credit Support Amount
• 7/1/2015	$27,690.60
• 10/1/2015	$70,359.45
• 1/1/2016	$136,687.95
• 4/1/2016	$234,839.15
• 7/1/2016	$374,969.35
• 10/1/2016	$565,128.20
• 1/1/2017	$812,047.60
• 4/1/2017	$1,099,272.65
• 7/1/2017	$1,401,852.20
• 10/1/2017	$1,689,077.25
• 1/1/2018	$1,942,341.80
• 4/1/2018	$2,142,165.90
• 7/1/2018	$2,289,417.90
• 10/1/2018	$2,392,557.65
• 1/1/2019	$2,464,201.95
• 4/1/2019	$2,511,452.30
• 7/1/2019	$2,542,116.50
• 10/1/2019	$2,549,678.25

Upon notification of the Annual Tax Security Reassessment, the Interconnection Customer shall modify its Tax Security accordingly. If the Annual Tax Security Reassessment results in a deficiency in the Tax Security amount, the Interconnection Customer will be required to increase its Tax Security Amount within 30 days after receipt of the deficiency notification. If the Annual Tax Security Reassessment results in a reduction of the Tax Security amount, the Interconnection Customer may choose to reduce its Tax Security amount or maintain the Tax Security in the current amount for the following year.

The Annual Tax Security Reassessment will be calculated utilizing the following methodology:

1) Tax Assessment Event: ((Current Tax Rate x (Gross income - NPV Tax Depreciation)) + Interest)/(1 - Current Tax Rate)

2) Subsequent Taxable Event: (Current Tax Rate x (Replacement Facility Cost – NPV Tax Depreciation))/(1-Current Tax Rate)

11) **Removal of the Participating TO's Interconnection Facilities:** Following termination of the LGIA, the Participating TO will remove the Participating TO's Interconnection Facilities from service to the Interconnection Customer pursuant to Article 2.5 of the LGIA. On or before the date one year following termination of this LGIA, the Participating TO shall notify the Interconnection Customer whether the Participating TO intends to physically remove the Participating TO's Interconnection Facilities, or any part thereof. If the Participating TO intends to physically remove the Participating TO's Interconnection Facilities or any part thereof, then the Participating TO shall physically remove such facilities within two years from the date of notification of intent, and the Interconnection Customer shall pay the Removal Cost pursuant to Section 2.4.3 of the LGIA.. If the Participating TO does not intend to physically remove the Participating TO's Interconnection Facilities, or any part thereof, then the Interconnection Customer shall have no obligation to pay such Removal Cost.

12) **Additional Definitions:** For the purposes of these Appendices, the following terms, when used with initial capitalization, whether in the singular or the plural, shall have the meanings specified below:

a) Accounting Practice: Generally accepted accounting principles and practices applicable to electric utility operations.

b) Annual Tax Security Reassessment: In accordance with the directives of FERC Orders 2003-A and 2003-B associated with Article 5.17.4 of the LGIA, the annual reassessment of the current tax liability, which will commence the first year after Interconnection Customer's in-service date.

c) Capital Additions: Any modifications to the Participating TO's Interconnection Facilities in accordance with Article 5.19 of the LGIA. Such modifications may be any Units of Property which are added to the Participating TO's Interconnection Facilities, the enlargement, modification or betterment of any Units of Property constituting a part of the Participating TO's Interconnection Facilities, or the replacement of any Units of Property constituting a part of the Participating TO's Interconnection Facilities (irrespective of whether such replacement constitutes an enlargement, modification or betterment of that which it replaces), the costs of which additions, enlargements, modifications, betterments or replacements would in accordance with Accounting Practice be capitalized and have not previously been included in the Interconnection Facilities Cost. If Capital Additions are required in order to benefit the Participating TO, or because of damage caused by negligence or willful misconduct of the Participating TO, then the Interconnection Customer will not bear cost responsibility for such Capital Additions, and no adjustment will be made to the Interconnection Facilities Cost, and no Capital Additions Cost or One-Time Cost will be charged to the Interconnection Customer, for such Capital Additions.

d) Capital Additions Cost: All costs, excluding One-Time Costs, determined by the Participating TO to be associated with the design, engineering, procurement, construction and installation of Capital Additions.

e) Capital Additions Payment: The sum of the Capital Additions Cost and the One-Time Costs of the work performed by the Participating TO associated with the Capital Additions

f) CPUC: The California Public Utilities Commission, or its regulatory successor.

g) Credit Support: A guarantee, surety bond, letter of credit, or other form of security meeting the requirements of Article 11.5 of the LGIA.

h) Customer-Financed Monthly Rate: The rate most recently adopted by the CPUC for application to the Participating TO's retail electric customers for added facilities, which does not compensate the Participating TO for replacement of added facilities. The currently effective Customer-Financed Monthly Rate is provided in Section 16 of this Appendix A.

i) Delivery Network Upgrades Cost: All costs, excluding One-Time Costs, determined by the Participating TO to be associated with the design, engineering, procurement, construction and installation of the Participating TO's Delivery Network Upgrades. The Delivery Network Upgrades Cost is provided in Section 15 of this Appendix A.

j) Delivery Network Upgrades Payment: The sum of the Delivery Network Upgrades Cost and the One-Time Costs associated with the Delivery Network Upgrades, as provided in Section 17 of this Appendix A.

k) Distribution Upgrades Cost: All costs, excluding ITCC and One-Time Costs, determined by the Participating TO to be associated with the design, engineering, procurement, construction and installation of the Distribution Upgrades. The Distribution Upgrades Cost is provided in Section 15 of this Appendix A.

l) Distribution Upgrades Payment: The sum of the Distribution Upgrades Cost and the One-Time Cost of the work performed by the Participating TO associated with the Distribution Upgrades, as provided in Section 17 of this Appendix A.

m) Interconnection Facilities Charge: The monthly charge to the Interconnection Customer to recover the revenue requirements for the Participating TO's Interconnection Facilities, calculated as the product of the Customer-Financed Monthly Rate and the Interconnection Facilities Cost. The Interconnection Facilities Charge is provided in Section 16 of this Appendix A.

n) Interconnection Facilities Completion Date: The date upon which the construction of the Participating TO's Interconnection Facilities is complete and such facilities are successfully tested and ready for service.

o) Interconnection Facilities Cost: All costs, excluding ITCC and One-Time Costs, determined by the Participating TO to be associated with the design, engineering, procurement, construction and installation of the Participating TO's Interconnection Facilities. The Interconnection Facilities Cost is provided in Section 15 of this Appendix A.

p) Interconnection Facilities Payment: The sum of the Interconnection Facilities Cost and the One-Time Cost of the work performed by the Participating TO associated with the Participating TO's Interconnection Facilities, as provided in Section 17 of this Appendix A.

q) ITCC: The ITCC is equal to the estimated tax liability and is the Income Tax Component of Contribution specified in the Preliminary Statement, Part M of the Participating TO's tariff on file with the CPUC, applicable to the Interconnection Facilities Cost and Distribution Upgrades Cost. The ITCC applicable to the Interconnection Facilities Cost and Distribution Upgrades Cost is described in Section 10 of this Appendix A.

r) One-Time Costs: All costs determined by the Participating TO to be associated with the design, engineering, procurement, construction and installation of the Participating TO's Interconnection Facilities, Distribution Upgrades, Network Upgrades or Capital Additions which are not capitalized.

s) Reliability Network Upgrades Cost: All costs, excluding One-Time Costs, determined by the Participating TO to be associated with the design, engineering, procurement, construction and installation of the Participating TO's Reliability Network Upgrades. The Reliability Network Upgrades Cost is provided in Section 15 of this Appendix A.

t) Reliability Network Upgrades Payment: The sum of the Reliability Network Upgrades Cost and the One-Time Costs of the work performed by the Participating TO associated with the Participating TO's Reliability Network Upgrades, as provided in Section 17 of this Appendix A.

u) Removal Cost: The actual cost the Participating TO incurs for the removal of the Participating TO's Interconnection Facilities, which is calculated as the amount, if positive, of the costs of removal minus the salvage value of the Participating TO's Interconnection Facilities.

v) Special Protection System ("SPS"): A system that reduces or trips generation under contingency outages to maintain system stability or to limit overloads on system facilities.

w) Tax Security: The Interconnection Customer's provision of Security with respect to the Interconnection Customer's tax indemnification obligations, provided in accordance with Article 5.17.3.

x) Units of Property: As described in FERC's "List of Units of Property for Use in Connection with Uniform System of Accounts Prescribed for Public Utilities and Licensees" in effect as of the date of this LGIA, as such list may be amended from time to time.

13) **Charges:**

a) The Interconnection Customer shall pay to the Participating TO the following charges in accordance with the LGIA: (i) Delivery Network Upgrades Payment; (ii) Distribution Upgrades Payment; (iii) Interconnection Facilities Payment; (iv) Reliability Network Upgrades Payment; (v) Capital Additions Payment; (vi) Interconnection Facilities Charge; (vii) any reimbursable FERC fees pursuant to Section 14(e) of this Appendix A; (viii) Removal Cost pursuant to Articles 2.4.3 and 2.5 of the LGIA and Section 14(d) of this Appendix A; and (ix) termination and disconnection costs pursuant to Articles 2.4 and 2.5 of the LGIA.

b) The Delivery Network Upgrades Cost, Distribution Upgrades Cost, Interconnection Facilities Cost, Reliability Network Upgrades Cost, associated One-Time Costs and Removal Cost shall be compiled in accordance with Accounting Practice.

c) If, during the term of the LGIA, the Participating TO executes an agreement to provide service to another entity (including retail load) which contributes to the need for the Participating TO's Interconnection Facilities, the charges due hereunder may be adjusted to appropriately reflect such service based on the Participating TO's cost allocation principles in effect at such time and shall be subject to FERC's approval.

14) **Supplemental Billing and Payment Provisions:**

a) Pursuant to Article 12.1 of the LGIA, the Participating TO shall submit to the Interconnection Customer invoices due for the preceding month for the Delivery Network Upgrades Payment, Distribution Upgrades Payment, Interconnection Facilities Payment, and the Reliability Network Upgrades Payment.

b) Pursuant to Article 12.1 of the LGIA, commencing on or following the Interconnection Facilities Completion Date, each month the Participating TO will render bills to the Interconnection Customer for the Interconnection Facilities Charge. The Interconnection Facilities Charge payments shall initially be based on the estimated Interconnection Facilities Cost as specified in Section 15 of this Appendix A. The Interconnection Facilities Charge for the first and last month of service hereunder shall be pro-rated based on the number of Calendar Days in which service was provided during said months.

c) In accordance with Articles 5.19.3 and 10.5 and pursuant to Article 12.1 of the LGIA, the Participating TO shall submit to the Interconnection Customer invoices due for the preceding month for the payments due for Capital Additions, if any.

   i) For Capital Additions that are the cost responsibility of the Interconnection Customer, prior to commencing work, the Participating TO will provide at least sixty (60) Calendar Days advance written notification to the Interconnection Customer, except that, at the Participating TO's sole discretion, the Participating TO may commence the work on the Capital Additions with either shorter advance written notification or written notification after the work has commenced if the Participating TO determines that the Capital Additions are required in accordance with safety or regulatory requirements or to preserve system integrity or reliability. The written notification will include the estimated cost of the Capital Additions, and the amount of and due date for the security, if any, required to be paid by the Interconnection Customer sufficient to cover the costs for constructing, procuring and installing the Capital Additions consistent with the applicable terms of Article 11.5 of the LGIA.

   ii) Except as provided in Section 12(c) above, if certain Participating TO's Interconnection Facilities are removed to accommodate Capital Additions and such removal results in a change in the Interconnection Facilities Cost, the Interconnection Facilities Charge shall be adjusted as of the in-service date of such Capital Additions to reflect the change in the Interconnection Facilities Cost.

   iii) Except as provided in Section 12(c) above, if Capital Additions result in an increase in the Interconnection Facilities Cost, then the Interconnection Facilities Charge shall be adjusted as of the in-service date of such Capital Additions to reflect the change in such costs.

   iv) The Participating TO's invoices shall be based on its estimated cost of the Capital Additions. As soon as reasonably practicable, but within twelve (12) months after the completion of the construction of any Capital Additions, the Participating TO shall provide an invoice of the final cost of the construction of the Capital Additions, and shall set forth such costs in sufficient detail to enable the Interconnection Customer to compare the actual costs with the estimates and to ascertain deviations, if any, from the cost estimates. The Participating TO shall refund to the Interconnection Customer any amount by which the actual payment by the Interconnection Customer for estimated costs exceeds the actual costs of construction within thirty (30) Calendar Days of the issuance of such final construction invoice; or, in the event the actual costs of construction exceed the Interconnection Customer's payment for estimated costs, then the Interconnection Customer shall pay to the Participating TO any amount by which the actual costs of construction exceed the payment by the Interconnection Customer for estimated costs within thirty (30) Calendar Days of the issuance of such final construction invoice.

d) If, in accordance with the removal of the Participating TO's Interconnection Facilities specified in Section 11 of this Appendix A, the Participating TO decides to physically remove the Participating TO's Interconnection Facilities, or any part thereof, the Participating TO shall render a bill to the Interconnection Customer for the Removal Cost. The Interconnection Customer shall pay the Removal Cost in accordance with Articles 2.4.3 and 2.5 of the LGIA. Such billing shall be initially based on the Participating TO's estimate of the Removal Cost. Within twelve (12) months following the removal of the Participating TO's Interconnection Facilities, or any part thereof, the

Participating TO shall determine the actual Removal Cost and provide the Interconnection Customer with a final invoice. The Participating TO shall refund to the Interconnection Customer any amount by which the payment by the Interconnection Customer for the estimated Removal Cost exceeds the actual Removal Cost within thirty (30) Calendar Days of the issuance of such final invoice; or, in the event the actual Removal Cost exceeds the Interconnection Customer's payment for the estimated Removal Cost, then the Interconnection Customer shall pay to the Participating TO any amount by which the actual Removal Cost exceeds the payment by the Interconnection Customer for the estimated Removal Cost within thirty (30) Calendar Days of the issuance of such final invoice.

e) The Interconnection Customer shall reimburse the Participating TO for all fees and charges related to the FERC fees and annual charges provided in Sections 381 and 382 of the FERC's regulations (18 C.F.R. § 381 and 382), as such regulation may from time to time be amended, that are imposed on the Participating TO which are attributable to the service provided under the LGIA, or any amendments thereto. The Participating TO will render bills to the Interconnection Customer for any such fees and charges incurred since the preceding billing, together with documentation that supports the attributed amounts. As of the Effective Date, no such fees and charges have been imposed on the Participating TO attributable to the service provided under the LGIA.

15) Interconnection Facilities Cost, Distribution Upgrades Cost, and Network Upgrades Cost Summary:

a) Estimated Cost:

Element-	Interconnection Facilities Cost (A)	Distribution Upgrades Cost (B)	Reliability Network Upgrades Cost (C)	Reliability Network Upgrades Cost** (D)	Interconnection Facilities One-Time Cost (E), Distribution Upgrades One-Time Cost (F), Reliability Network Upgrades One-Time Cost (G)	Total Facilities Cost* (H) (A+B+C+E+F+G)	Total Costs to Interconnection Customer* (I) (A+B+D+E+F+G)	ITCC***
Serrano-Valley 500kV Transmission Line-Line Loop			$28,385,876.00	$0.00	$0.00	$28,385,876.00	$0.00	$0.00
Alberhill 500 kV Substation	$2,514,405.00		$92,213,135.00	$22,431,255.00	$0.00	$94,727,540.00	$24,945,660.00	$880,041.75
Serrano Substation			$136,859.00	$136,859.00	$0.00	$136,859.00	$136,895.00	$0.00
Valley Substation		$2,621,750.00	$136,859.00	$136,859.00	$0.00	$2,758,609.00	$2,758,609.00	$917,612.50
Etiwanda Substation			$33,775,728.00	$33,775,728.00	$0.00	$33,775,728.00	$33,775,728.00	$0.00
Telecom	$2,078,299.00		$6,445,370.00	$0.00	$0.00	$8,523,669.00	$2,078,299.00	$727,404.65
Power System Controls-	$70,341.00		$88,961.00	$0.00	$0.00	$159,302.00	$70,341.00	$24,619.35
Corporate Real Estate			$23,201,368.00	$0.00	$0.00	$23,201,368.00	$0.00	$0.00
Licensing & Environmental			$24,844,599.00	$0.00	$0.00	$24,844,599.00	$0.00	$0.00
Total	$4,663,045.00	$2,621,750.00	$209,228,755.00	$56,480,701.00	$0.00	$216,513,550.00	$63,765,496.00	$2,549,678.25

Costs are shown in nominal dollars

*Note: The Interconnection Customer will be responsible for the Total Facilities Cost shown in Column (H) of the above table, including the Reliability Network Upgrades Cost shown in Column (C), if the Participating TO chooses not to proceed with the 115 kV portion of the Alberhill 500/115 kV Substation.

In such event, the LGIA will be amended to reflect the revised scope of work, costs, milestone schedule and payment schedule. The Reliability Network Upgrades Cost shown in Column (C) reflects the facilities and costs necessary to engineer, design and construct the Reliability Network Upgrades, as specified in Appendix A, Section 2.

**Note: The Interconnection Customer will be responsible for paying the Total Costs to Interconnection Customer shown in Column (I) of the above table, including the Reliability Network Upgrades Cost shown in Column (D), if the Participating TO proceeds with the 115 kV portion of the Alberhill 500/115 kV Substation.

***Note: ITCC/Estimated tax liability will be provided by Interconnection Customer in accordance with Appendix A, Section 10.

b) Actual Cost:

(To be completed later)

Element-	Interconnection Facilities Cost	Distribution Upgrades Cost	Reliability Network Upgrades Cost	Interconnection Facilities One-Time Cost	Distribution Upgrades One-Time Cost	Reliability Network Upgrades One-Time Cost	Total Cost	ITCC
Serrano-Valley 500kV Transmission Line-Line Loop								
Alberhill 500/115kV Substation								
Serrano Substation								
Valley Substation								
Etiwanda Substation								
Telecom								
Power System Controls								
Corporate Real Estate								
Permitting								
Total								

16) **Interconnection Facilities Charge**:

Interconnection Facilities Charge = Customer Financed Monthly Rate x (Interconnection Facilities Cost)

Effective	Customer-Financed Monthly Rate	Estimated Interconnection Facilities Cost	Interconnection Facilities Charge Based on Estimated Cost	Actual Interconnection Facilities Cost	Interconnection Facilities Charge based on actual cost
As of the Interconnection Facilities Completion Date	0.39%	$4,663,045.00	$18,185.88	[to be inserted after true-up]	[to be inserted after true-up]

17) **<u>Interconnection Facilities Payment, Distribution Upgrades Payment, and Reliability Network Upgrades Payment</u>:**

An estimate of the monthly incurred costs is shown below. [Note: This estimate assumes that the LGIA has been executed and work starts by the Effective Date to achieve an In-Service Date approximately fifty-two (52) months following the Effective Date.]

Payment No.	Payment Due Date	Interconnection Facilities Cost (A)	Distribution Upgrades Cost (B)	Reliability Network Upgrades Cost (C)	Total Payment Amount (D=A+B+C)	ITCC (E=(A+B)x.35)
1	7/1/15	$14,478.00	$8,140.00	$175,361.00	$197,979.00	$7,916.30
2	8/1/15	$16,767.00	$9,427.00	$203,095.00	$229,289.00	$9,167.90
3	9/1/15	$19,398.00	$10,906.00	$234,951.00	$265,255.00	$10,606.40
4	10/1/15	$22,410.00	$12,600.00	$271,450.00	$306,460.00	$12,253.50
5	11/1/15	$25,854.00	$14,536.00	$313,145.00	$353,535.00	$14,136.50
6	12/1/15	$29,772.00	$16,739.00	$360,616.00	$407,127.00	$16,278.85
7	1/1/16	$35,080.00	$19,723.00	$424,899.00	$479,702.00	$19,181.05
8	2/1/16	$40,225.00	$22,616.00	$487,213.00	$550,054.00	$21,994.35
9	3/1/16	$46,002.00	$25,864.00	$557,191.00	$629,057.00	$25,153.10
10	4/1/16	$52,450.00	$29,490.00	$635,304.00	$717,244.00	$28,679.00
11	5/1/16	$59,599.00	$33,509.00	$721,882.00	$814,990.00	$32,587.80
12	6/1/16	$67,457.00	$37,927.00	$817,061.00	$922,445.00	$36,884.40
13	7/1/16	$76,014.00	$42,738.00	$920,711.00	$1,039,463.00	$41,563.20
14	8/1/16	$85,231.00	$47,921.00	$1,032,359.00	$1,165,511.00	$46,603.20
15	9/1/16	$95,036.00	$53,432.00	$1,151,101.00	$1,299,569.00	$51,963.80
16	10/1/16	$105,310.00	$59,209.00	$1,275,544.00	$1,440,063.00	$57,581.65
17	11/1/16	$115,892.00	$65,159.00	$1,403,732.00	$1,584,783.00	$63,367.85
18	12/1/16	$126,575.00	$71,166.00	$1,533,140.00	$1,730,881.00	$69,209.35
19	1/1/17	$140,464.00	$78,975.00	$1,701,363.00	$1,920,802.00	$76,803.65
20	2/1/17	$150,792.00	$84,781.00	$1,826,451.00	$2,062,024.00	$82,450.55
21	3/1/17	$160,329.00	$90,143.00	$1,941,969.00	$2,192,441.00	$87,665.20
22	4/1/17	$168,735.00	$94,870.00	$2,043,792.00	$2,307,397.00	$92,261.75
23	5/1/17	$175,683.00	$98,776.00	$2,127,944.00	$2,402,403.00	$96,060.65
24	6/1/17	$180,881.00	$101,698.00	$2,190,895.00	$2,473,474.00	$98,902.65
25	7/1/17	$184,097.00	$103,507.00	$2,229,858.00	$2,517,462.00	$100,661.40
26	8/1/17	$185,186.00	$104,119.00	$2,243,051.00	$2,532,356.00	$101,256.75
27	9/1/17	$184,097.00	$103,507.00	$2,229,858.00	$2,517,462.00	$100,661.40
28	10/1/17	$180,881.00	$101,698.00	$2,190,895.00	$2,473,474.00	$98,902.65
29	11/1/17	$175,683.00	$98,776.00	$2,127,944.00	$2,402,403.00	$96,060.65
30	12/1/17	$168,735.00	$94,870.00	$2,043,792.00	$2,307,397.00	$92,261.75
31	1/1/18	$164,449.00	$92,460.00	$1,991,878.00	$2,248,787.00	$89,918.15
32	2/1/18	$154,666.00	$86,960.00	$1,873,389.00	$2,115,015.00	$84,569.10
33	3/1/18	$144,074.00	$81,004.00	$1,745,089.00	$1,970,167.00	$78,777.30
34	4/1/18	$133,009.00	$74,784.00	$1,611,070.00	$1,818,863.00	$72,727.55
35	5/1/18	$121,783.00	$68,471.00	$1,475,084.00	$1,665,338.00	$66,588.90
36	6/1/18	$110,661.00	$62,218.00	$1,340,379.00	$1,513,258.00	$60,507.65
37	7/1/18	$99,865.00	$56,148.00	$1,209,611.00	$1,365,624.00	$54,604.55
38	8/1/18	$89,563.00	$50,356.00	$1,084,833.00	$1,224,752.00	$48,971.65
39	9/1/18	$79,878.00	$44,910.00	$967,510.00	$1,092,298.00	$43,675.80
40	10/1/18	$70,885.00	$39,855.00	$858,591.00	$969,331.00	$38,759.00
41	11/1/18	$62,628.00	$35,212.00	$758,575.00	$856,415.00	$34,244.00
42	12/1/18	$55,116.00	$30,989.00	$667,597.00	$753,702.00	$30,136.75
43	1/1/19	$49,689.00	$27,937.00	$601,849.00	$679,475.00	$27,169.10
44	2/1/19	$43,448.00	$24,428.00	$526,260.00	$594,136.00	$23,756.60
45	3/1/19	$37,892.00	$21,304.00	$458,953.00	$518,149.00	$20,718.60
46	4/1/19	$32,969.00	$18,537.00	$399,335.00	$450,841.00	$18,027.10
47	5/1/19	$28,629.00	$16,096.00	$346,765.00	$391,490.00	$15,653.75
48	6/1/19	$24,817.00	$13,953.00	$300,592.00	$339,362.00	$13,569.50
49	7/1/19	$21,481.00	$12,077.00	$260,176.00	$293,734.00	$11,745.30
50	8/1/19	$18,568.00	$10,440.00	$224,901.00	$253,909.00	$10,152.80
51	9/1/19	$16,032.00	$9,014.00	$194,190.00	$219,236.00	$8,766.10
52	10/1/19	$13,830.00	$7,775.00	$167,507.00	$189,112.00	$7,561.75
Total		$4,663,045.00	$2,621,750.00	$56,480,701.00	$63,765,496.00	$2,549,678.25

Interconnection Facilities Payment = (Interconnection Facilities Cost + Interconnection Facilities One-Time Cost) = $4,663,045.00

Distribution Upgrades Payment = (Distribution Upgrades Cost + Associated One-Time Cost) = $2,621,750.00

Reliability Upgrades Payment = (Reliability Upgrades Cost + Associated One-Time Cost) =$56,480,701.00

Transmission Credit pursuant to Section 7 of this Appendix A = $56,480,701.00

* ITCC/Estimated Tax Liability will be provided by Interconnection Customer in accordance with Appendix A, Section 10.

18) **Other Potential Facilities**:

The Interconnection Customer understands and acknowledges that the Interconnection of the LEAPS Generating Facility is dependent upon certain network upgrades which are currently the cost responsibility of projects ahead of the LEAPS Generating Facility in the Participating TO's Interconnection Application queue. In the event; (i) a project in the queue ahead of the LEAPS Generating Facility is withdrawn from the queue, or (ii) it is determined by the Participating TO or the CAISO that some or all of the network upgrades currently assigned to earlier-queued projects are no longer required by such projects, the Interconnection Customer may be responsible for an additional amount, up to the maximum cost exposure of the network upgrades identified in this Section 19 of this Appendix A. Such additional other potential facilities or network upgrades are taken from the Interconnection Facilities Study.

The Interconnection Customer's revised cost responsibility for the network upgrades will be reflected in an amendment to the LGIA. Such amendment shall be subject to FERC acceptance or approval.

While the Interconnection Customer is currently responsible for the Network Upgrades identified in Section 2 of this Appendix A, the Interconnection Customer may be responsible for all or a portion of the following other network upgrades, under the conditions described above:

A. Transmission:

1. Etiwanda-San Bernardino 220 kV Transmission Line:

    a. Upgrade the line by eliminating line-to-ground clearance restrictions which presently limit the line rating to lesser values than those of the existing 2-1033KCMIL ACSR conductors.
    b. This upgrade requires the raising of two existing suspension lattice structures and the installation of one additional interest dead-end transmission pole.
    c. This work also requires the lowering of existing distribution circuits at five locations and the undergrounding of one segment of 66 kV line at one location where the line crosses over them and also the trimming of some trees at three locations.

2. San Bernardino-Vista 220 kV Transmission Line:

    a. Upgrade the line by replacing 8.3 circuit miles of existing 2-1033KCMIL ACSR conductors with new 2-1590KCMIL ACSR. This includes the following modifications:

        i. Install two new double circuit lattice towers.
        ii. Replace eighteen double circuit lattice towers with similar structures.

    b. This work also requires the replacement of the existing hardware/insulator assemblies with new assemblies and polymer type insulators.

B. Substation:

1. Etiwanda Generating Station: Replace two 1200A disconnect switches on the San Bernardino 220 kV line position with 3000A rated equipment to support 60% of the highest contingency load of 3083A or 1855A.

2. San Bernardino Generating Station: Replace four 2000A disconnect switches on the Vista 220 kV line position with 3000A rated equipment to support 60% of the highest contingency load of 3745A or 2250A.

3. Vista Substation: Replace four 2000A disconnect switches on the San Bernardino 220 kV line position with 3000A rated equipment to support 60% of the highest contingency load of 3745A or 2250A.

4. Devers Substation:

   a. Replace seven 40kA, and one three-cycle 50 kV, 220 kV circuit breakers with new two-cycle 50 kA rated circuit breakers.
   b. Install three sets of TRV line-to-ground capacitors (total of nine units) to upgrade three 40 kA circuit breakers to 50 kA rating.

5. Lewis Substation: Replace two 45.6 kA, 220 kV circuit breakers with new 50 kA rated circuit breakers.

6. Lugo Substation:

   a. Replace three 50kA, 220 kV circuit breakers with new 63kA rated circuit breakers.
   b. Install four sets of TRV line-to-ground capacitors (total of twelve units) to upgrade two 50 kA circuit breakers to 63kA rating.

7. Mira Loma Substation:

   a. Replace twelve 63 kA, 220 kV circuit breakers with new 80 kA rated circuit breakers.
   b. Upgrade the 220 kV switchyard to 80 kA rating.
   c. The scope of work for the switchyard upgrade has not been completed at this time. A scope of work and cost estimate has been prepared for the upgrade of a similar facility. At this time it is expected that the type of upgrades for this location would be very similar to those already scoped and estimated for the similar facility. Based on this assumption, it is expected that, in addition to the work shown in 7a and 7b above, the following additional upgrades would be required:
      i. Replace twelve 220kV circuit breakers.
      ii. Replace twenty four 220 kV disconnect switches.
      iii. Replace seven 220 kV surge arresters.
      iv. Replace all line and bank vertical risers with tubular conductors.
      v. Replace all 4/0 CU connectors to the ground grid with new 350 kCMIL ACSR.
      vi. Install new sections of 350 kCMIL ACSR ground grid and connect to the existing 4/0 CU grid.

8. Corporate Real Estate and Permits: Acquire new permits and rights-of-way for the upgrade of the Etiwanda-San Bernardino and San Bernardino-Vista 220 kV transmission lines.

The maximum cost exposure for the other potential facilities shall be as follows:

Element	**Other Potential Facilities Costs**
Etiwanda-San Bernardino 220 kV T/L upgrade to eliminate ground clearances	$1,760,000
San Bernardino-Vista 220 kV T/L upgrade to 2-1590KCMIL	$11,700,000

ACSR	
Etiwanda Gen. Sta. Line Equipment Upgrades	$630,000
San Bernardino Gen. Sta. Line Equipment Upgrades	$1,260,000
Vista Sub. Line Equipment Upgrades	$1,260,000
Devers Sub. Replace 8 & upgrade 2 220 kV CBs	$4,740,000
Lewis Sub. Replace 2 220 kV CBs	$1,070,000
Lugo Sub. Replace 3 & upgrade 2 220 kV CBs	$2,240,000
Mira Loma Sub. Replace 12 220 kV CBS	$8,430,000
Mira Loma Sub. Upgrade 220 kV Switchyard to 80 kA rating	$16,800,000
Corporate Real Estate upgrade two 220 kV transmission lines.	$500,000
Total	$51,040,000

Appendix B
To LGIA

Milestones

1. **Interconnection Customer's Selected Option:** Pursuant to Article 5.1 of the LGIA, the Interconnection Customer has selected the Standard Option.

2. **Milestone Dates: Table B1**

Item	Milestone	Responsible Party	Due Date
(a)	Submit proof of insurance coverage in accordance with Article 18.3 of the LGIA	Interconnection Customer	On or before June 1, 2015
(b)	Submit written authorization to proceed with design and procurement of the Participating TO's Interconnection Facilities, Distribution Upgrades, and Network Upgrades to the Participating TO and CAISO pursuant to Article 5.5.2 of the LGIA	Interconnection Customer	Within thirty (30) Calendar Days of the Effective Date
(c)	Submit security for the Participating TO's Interconnection Facilities, Distribution Upgrades, and Network Upgrades to the Participating TO pursuant to Articles 5.6.4 and 11.5 of the LGIA	Interconnection Customer	As shown in Appendix A, Section 9(b), 9(c) and 9(d) Table B.3.
(d)	Submit written authorization to proceed with construction to the Participating TO and CAISO pursuant to Article 5.6.3 of the LGIA	Interconnection Customer	Within thirty (30) Calendar Days of the Effective Date
(e)	Submit security for the estimated tax liability to the Participating TO pursuant to Article 5.17.3 of the LGIA	Interconnection Customer	As shown in Appendix A, Section 10.
(f)	Completion of the Participating TO's Interconnection Facilities, Distribution Upgrades and Network Upgrades.	Participating TO	On or before October 1, 2019. *See Note 2 below..
			Within two (2) months following the Interconnection Customer's completion of the Interconnection Customer's Large Generating Facility and Interconnection Customer's Interconnection Facilities and completion by the Participating TO of the Participating TO's facilities as described in Appendix A of this LGIA. Note: final test

(g)	Test of RTU and RTU telecom equipment and all cutovers	Participating TO	of the RTU cannot occur until generator runs for approximately thirty days.
(h)	Submit initial specifications for the Interconnection Customer's Interconnection Facilities and Large Generating Facility, including system protection facilities, to the Participating TO and the CAISO as specified in Article 5.10.1 of the LGIA	Interconnection Customer	At least one hundred eighty (180) Calendar Days prior to the Initial Synchronization Date.
(i)	Initial information submission which shall include the Participating TO's Transmission System information necessary to allow the Interconnection Customer to select equipment, in accordance with Article 24.2 of the LGIA	Participating TO	At least one hundred eighty (180) Calendar Days prior to Trial Operation
(j)	Updated information submission by the Interconnection Customer, including manufacturer information in accordance with Article 24.3 of the LGIA	Interconnection Customer	No later than one hundred eighty (180) Calendar Days prior to Trial Operation
(l)	Review of and comment on the Interconnection Customer's initial specifications as specified in Article 5.10.1 of the LGIA	Participating TO and CAISO	Within thirty (30) Calendar Days of the Interconnection Customer's submission of initial specifications
(m)	Submit final specifications for the Interconnection Customer's Interconnection Facilities and Large Generating Facility, including system protection facilities, to the Participating TO and the CAISO as specified in Article 5.10.1 of the LGIA	Interconnection Customer	At least ninety (90) Calendar Days prior to the Initial Synchronization Date.
(n)	Review of and comment on the Interconnection Customer's final specifications as specified in Article 5.10.1 of the LGIA	Participating TO and CAISO	Within thirty (30) Calendar Days of the Interconnection Customer's submission of final specifications
(o)	Notification of Balancing Authority Area to the Participating TO and the CAISO pursuant to Article 9.2	Interconnection Customer	At least three (3) months prior to the Initial Synchronization Date of Project
(p)	Performance of a complete calibration test and functional trip test of the system protection facilities pursuant to Article 9.7.4.6 of the LGIA	Interconnection Customer and Participating TO	At least sixty (60) Calendar Days prior to the In-Service Date
(q)	In-Service Date	Interconnection Customer	October 1, 2019
(r)	Initial Synchronization Date	Interconnection Customer	October 1, 2019
(s)	Notification of operating communications and notifications information pursuant to Appendix F, of the LGIA	CAISO, Participating TO and Interconnection Customer	Prior to Initial Synchronization Date

(t)	Trial Operation	Interconnection Customer	October 1, 2019
(u)	Performance of a complete calibration test and functional trip test of the system protection facilities pursuant to Article 9.7.4.6 of the LGIA	Interconnection Customer and Participating TO	At least sixty (60) Calendar Days prior to the Commercial Operation Date
(v)	Testing of the Participating TO's Interconnection Facilities, Delivery Network Upgrades, Distribution Upgrades, and Network Upgrades and testing of the Interconnection Customer's Large Generating Facility and Interconnection Facilities in accordance with Article 6.1 of the LGIA	Interconnection Customer and Participating TO	At least sixty (60) Calendar Days prior to the Commercial Operation Date
(w)	Provide written approval to the Interconnection Customer for the operation of the Large Generating Facility in accordance with Article 6.1 of the LGIA	Participating TO	Within fifteen (15) Calendar Days prior to the Commercial Operation Date
(x)	Commercial Operation Date	Interconnection Customer	December 31, 2019
(y)	Submittal of "as-built" drawings, information and documents for the Interconnection Customer's Interconnection Facilities and the Electric Generating Units in accordance with Article 5.10.3 of the LGIA to the Participating TO and the CAISO	Interconnection Customer	Within one hundred twenty (120) Calendar Days after the Commercial Operation Date, unless otherwise agreed

Note 1: The Interconnection Customer understands and acknowledges that such timelines are only estimates and that equipment and material lead times, labor availability, outage coordination, regulatory approvals, or other unforeseen events could delay the actual beyond those specified.

The Interconnection Customer also understands and agrees that the method of service required to interconnect the LEAPS Generating Facility may require re-evaluation due to changes to the Participating TO's electrical system or addition of new generation.

*Note 2: The Interconnection Customer understands and acknowledges that such timeline is based on a fifty two (52) month design/engineering/permitting/procurement/construction/test schedule and may be revised if the Interconnection Customer's proposed In-Service Date is further revised, or pursuant to Note 1 above.

Appendix C
To LGIA

Interconnection Details

1. **Generating Facility:** All equipment and facilities comprising the LEAPS pumped storage generating facility in Lake Elsinore, California, as disclosed by the Interconnection Customer in its Interconnection Request and subsequent revisions to the Interconnection Request, which consists of a 500 MW generating facility comprising two, 250 MW Voith generators, 2.5 MW auxiliary load for a net output capacity of 497.5 MW, 600 MW of pump load, step-up transformers, meters and metering equipment and appurtenant equipment (the "LEAPS Generating Facility"). The Interconnection Customer attests that the original 250 MW Seimens generators and the 250 MW Voith generators are electrically identical and therefore no Material Modification exists.

2. **Interconnection Customer Operational Requirements**.

(a) Pursuant to Article 9.4 of the LGIA, the Interconnection Customer shall operate the LEAPS Generating Facility and the Interconnection Customer's Interconnection Facilities in accordance with the Participating TO's Tariff, the CAISO Tariff, and NERC requirements.

(b) The LEAPS Generating Facility shall be operated so as to prevent or protect against the following adverse conditions on the Participating TO's electric system: inadvertent and unwanted re-energizing of a utility dead line or bus; interconnection while out of synchronization; overcurrent; voltage imbalance; ground faults; generated alternating current frequency outside permitted safe limits; poor power factor or reactive power outside permitted limits; and abnormal waveforms.

3. **Interconnection Principles:**

(a) This LGIA provides for interconnection of a total capacity of 500 MW of generation and 600 MW of pump load, resulting from the interconnection of the LEAPS Generating Facility, as described in Section 1 of this Appendix C. The Interconnection Customer acknowledges that if the Interconnection Customer wishes to increase the amount of Interconnection capacity provided pursuant to this LGIA, the Interconnection Customer shall be required to submit a new Interconnection Request in accordance with the terms and conditions of the CAISO Tariff.

(b) The costs of any mitigation measures required to third party transmission systems resulting from the interconnection of LEAPS Generating Facility to the Participating TO's electrical system are not reflected in this LGIA. The Participating TO shall have no responsibility to pay costs associated with any such mitigation measures.

(c) In the event the Participating TO's Interconnection Facilities are utilized to provide retail service to the Interconnection Customer in addition to the wholesale Interconnection service provided herein, and the Interconnection Customer fails to make payment for such retail service in accordance with the Participating TO's applicable retail tariffs, the Participating TO's Interconnection Facilities may be removed from service to the Interconnection Customer, subject to the notice and other provisions of such retail tariffs, until payment is made by the Interconnection Customer pursuant to such retail tariffs.

(d) Review by the Participating TO of the electrical specifications, design, construction, operation, or maintenance of the LEAPS Generating Facility or the Interconnection Customer's Interconnection Facilities shall not constitute any representation as to the economic or technical feasibility, operational capability, or reliability of such facilities. The Interconnection Customer shall in no way represent to any third party that any such review by the Participating TO of such facilities, including, but not limited to, any review of the design, construction, operation, or maintenance of such facilities by the Participating TO, is a representation by the Participating TO as to the economic or technical feasibility, operational capability, or reliability of the LEAPS Generating

Facility or the Interconnection Customer's Interconnection Facilities.

(e) Potential LGIA Operations Conflict Resolution:
(i) Interconnection Customer has requested two points of interconnection for the LEAPS Generating Facility to the CAISO-Controlled Grid. The first point of interconnection is proposed to be with the system operated by San Diego Gas & Electric Company ("SDGE"). Interconnection Customer has previously entered into an interconnection agreement with CAISO and SDGE ("SDGE IA"). The second proposed point of interconnection is with the system operated by SCE.
(ii) If both interconnections are established, then the Interconnection Customer will be subject to the SDGE IA and this LGIA, with respect to their respective points of interconnection set forth in each interconnection agreement. After the execution of this LGIA, the Parties agree to enter into good faith discussions, at mutually convenient times and places to be arranged by Interconnection Customer, to informally discuss potential conflicts that may arise from the operation of two interconnection agreements relating to the same generating facility; provided that the following two conditions are met: first, that in this agreement to meet obligates the Parties to prospectively resolve potential conflicts and, second, that SDGE also appears at these discussions. The Parties may appear telephonically in these meetings.
(iii) In the event an actual conflict arises, the Parties agree to enter into good faith negotiations, at mutually convenient times and places to be arranged by Interconnection Customer, to address the resolution of such conflict; provided that the following two conditions are met: first, that nothing in this commitment to negotiate in good faith obligates the Parties to reach an agreement to resolve such conflict and, second, that SDGE also appears at these discussions. At these discussions, the Parties agree to undertake commercially reasonable efforts to enter into an agreement to address the manner in which such conflict, after it arises, is to be addressed.

4. Interconnection Operations:

(a) The Interconnection Customer shall cause the LEAPS Generating Facility to participate in any SPS required to prevent thermal overloads and unstable conditions resulting from outages. Such participation shall be in accordance with applicable FERC regulations, and CAISO Tariff provisions and protocols. The Interconnection Customer will not be entitled to any compensation from the Participating TO or the CAISO, pursuant to this LGIA, for loss of generation output when (i) the LEAPS Generating Facility generation is reduced or tripped off-line due to implementation of the SPS; or (ii) such generation output is restricted in the event the SPS becomes inoperable. Pursuant to Good Utility Practice, and consistent with Section 9.8.4 of this LGIA, the Participating TO will provide the Interconnection Customer advance notice of any required SPS.

(b) Following outages of the Interconnection Facilities or the LEAPS Generating Facility, the Interconnection Customer shall not energize the LEAPS Generating Facility for any reason without specific permission from the Participating TO's and the CAISO's operations personnel. Such permission shall not be unreasonably withheld.

(c) The Interconnection Customer shall maintain operating communications with the Participating TO's designated switching center. The operating communications shall include, but not be limited to, system parallel operation or separation, scheduled and unscheduled outages, equipment clearances, protective relay operations, and levels of operating voltage and reactive power.

(d) **Compliance with Applicable Reliability Standards:** The Interconnection Customer shall comply with all Applicable Reliability Standards for its Interconnection Customer's Interconnection Facilities and the LEAPS Generating Facility. The Participating TO will not assume any responsibility for complying with mandatory reliability standards for such facilities and offers no opinion whether the Interconnection Customer must register with NERC. If required to register with NERC, the Interconnection Customer shall be responsible for complying with all Applicable Reliability Standards for its Interconnection Customer's Interconnection Facilities and the LEAPS

Generating Facility, up to the Point of Change of Ownership as described in Section 4 of Appendix A of this LGIA.

Appendix D
To LGIA

Security Arrangements Details

Infrastructure security of CAISO Controlled Grid equipment and operations and control hardware and software is essential to ensure day-to-day CAISO Controlled Grid reliability and operational security. FERC will expect the CAISO, all Participating TOs, market participants, and Interconnection Customers interconnected to the CAISO Controlled Grid to comply with the recommendations offered by the President's Critical Infrastructure Protection Board and, eventually, best practice recommendations from the electric reliability authority. All public utilities will be expected to meet basic standards for system infrastructure and operational security, including physical, operational, and cyber-security practices.

The Interconnection Customer shall meet the requirements for security implemented pursuant to the CAISO Tariff, including the CAISO's standards for information security posted on the CAISO's internet web site at the following internet address: http://www.caiso.com/pubinfo/info-security/index.html.

Appendix E
To LGIA

Commercial Operation Date

This Appendix E is a part of the LGIA.

[Date]

Mr. Stephen Rutty
Director, Grid Assets
California Independent System Operator Corporation
250 Outcropping Way
Folsom, CA 95630

Mr. Robert Kott
Manager, Model and Contract Implementation
California Independent System Operator Corporation
250 Outcropping Way
Folsom, CA 95630

Mr. William Law
Manager, Grid Contracts Management
Southern California Edison Company
P. O. Box 800
2244 Walnut Grove Avenue
Rosemead, California 91770

Re: _____ Electric Generating Unit(s)

Dear Messrs, Rutty, Kott and Law:

On **[Date] Nevada Hydro Company** has completed Trial Operation of LEAPS Generating Facility Unit No. ___. This letter confirms that Nevada Hydro Company commenced Commercial Operation of LEAPS Generating Facility Unit No. ___ at the Electric Generating Unit, effective as of **[Date plus one day]**.

Thank you.

[Signature]

Nevada Hydro Company

c: Linda Wright (CAISO)

Appendix F
To LGIA

Addresses for Delivery of Notices and Billings

Notices:

1. General Notices:

CAISO	Participating TO	Interconnection Customer
Ms. Linda Wright	Manager, Grid Contracts Management	Rexford Wait
250 Outcropping Way Folsom, CA 95630	P. O. Box 600 Rosemead, CA 91770	2416 Cades Way Vista, CA 90281

2. Operating Communications and Notifications:

The CAISO, Participating TO and the Interconnection Customer shall provide for operating communications through their respective designated representatives as follows:

The Parties agree to exchange the following information within ten (10) Calendar Days prior to the LEAPS Generation Facility's Initial Synchronization Date:

CAISO	Participating TO	Interconnection Customer
CAISO Real Time Desk/24 Hour Telephone:	Grid Control Center/24 Hour Telephone:	*Operator Name and/or Title: Control Room Operator *24 Hour Telephone:
Alternate Phone:		*Operation Center Fax. No.: *E-mail:

3. Operational Matters, Force Majeure, and Outage Notices:

CAISO	Participating TO	Interconnection Customer
Name:	Name/Title:	Name/Title:
Phone:	Phone:	Phone:

4. For Emergencies:

CAISO	Participating TO	Interconnection Customer
Name:	Name/Title:	Name/Title:
Phone:	Phone:	Phone:

5. Billing and Payments:

CAISO	Participating TO	Interconnection Customer
Finance Dept.	Manager, Grid Contracts Management	Title:
Mr. Dennis Estrada		Name:
250 Outcropping Way Folsom, CA 95630	P. O. Box 600 Rosemead, CA 91770	Address:

6. Alternate Forms of Delivery of Notices (telephone, facsimile or e-mail):

CAISO	Participating TO	Interconnection Customer
lwright@caiso.com	Manager, Grid Contracts	

	Management Tel: (626) 302-9640 Fax: (626) 302-1152	Name/Title: Phone:

Appendix G
To LGIA

[Not Used]

Appendix H
To LGIA

INTERCONNECTION REQUIREMENTS FOR AN ASYNCHRONOUS GENERATING FACILITY

Appendix H sets forth interconnection requirements specific to all Asynchronous Generating Facilities. Existing individual generating units of an Asynchronous Generating Facility that are, or have been, interconnected to the CAISO Controlled Grid at the same location are exempt from the requirements of this Appendix H for the remaining life of the existing generating unit. Generating units that are replaced, however, shall meet the requirements of this Appendix H.

A. Technical Requirements Applicable to Asynchronous Generating Facilities

i. Low Voltage Ride-Through (LVRT) Capability

An Asynchronous Generating Facility shall be able to remain online during voltage disturbances up to the time periods and associated voltage levels set forth in the requirements below.

1. An Asynchronous Generating Facility shall remain online for the voltage disturbance caused by any fault on the transmission grid, or within the Asynchronous Generating Facility between the Point of Interconnection and the high voltage terminals of the Asynchronous Generating Facility's step up transformer, having a duration equal to the lesser of the normal three-phase fault clearing time (4-9 cycles) or one-hundred fifty (150) milliseconds, plus any subsequent post-fault voltage recovery to the final steady-state post-fault voltage. Clearing time shall be based on the maximum normal clearing time associated with any three-phase fault location that reduces the voltage at the Asynchronous Generating Facility's Point of Interconnection to 0.2 per-unit of nominal voltage or less, independent of any fault current contribution from the Asynchronous Generating Facility.

2. An Asynchronous Generating Facility shall remain online for any voltage disturbance caused by a single-phase fault on the transmission grid, or within the Asynchronous Generating Facility between the Point of Interconnection and the high voltage terminals of the Asynchronous Generating Facility's step up transformer, with delayed clearing, plus any subsequent post-fault voltage recovery to the final steady-state post-fault voltage. Clearing time shall be based on the maximum backup clearing time associated with a single point of failure (protection or breaker failure) for any single-phase fault location that reduces any phase-to-ground or phase-to-phase voltage at the Asynchronous Generating Facility's Point of Interconnection to 0.2 per-unit of nominal voltage or less, independent of any fault current contribution from the Asynchronous Generating Facility.

3. Remaining on-line shall be defined as continuous connection between the Point of Interconnection and the Asynchronous Generating Facility's units, without any mechanical isolation. Asynchronous Generating Facilities may cease to inject current into the transmission grid during a fault.

4. The Asynchronous Generating Facility is not required to remain on line during multi-phased faults exceeding the duration described in Section A.i.1 of this Appendix H or single-phase faults exceeding the duration described in Section A.i.2 of this Appendix H.

5. The requirements of this Section A.i of this Appendix H do not apply to faults that occur between the Asynchronous Generating Facility's terminals and the high side of the step-up transformer to the high-voltage transmission system.

6. Asynchronous Generating Facilities may be tripped after the fault period if this action is intended as part of a special protection system.

7. Asynchronous Generating Facilities may meet the requirements of this Section A.i of this Appendix H through the performance of the generating units or by installing additional equipment within the Asynchronous Generating Facility, or by a combination of generating unit performance and additional equipment.

8. The provisions of this Section A.i of this Appendix H apply only if the voltage at the Point of Interconnection has remained within the range of 0.9 and 1.10 per-unit of nominal voltage for the preceding two seconds, excluding any sub-cycle transient deviations.

The requirements of this Section A.i in this Appendix H shall not apply to any Asynchronous Generating Facility that can demonstrate to the CAISO a binding commitment, as of July 3, 2010, to purchase inverters for thirty (30) percent or more of the Generating Facility's maximum Generating Facility Capacity that are incapable of complying with the requirements of this Section A.i in this Appendix H. The Interconnection Customer must include a statement from the inverter manufacturer confirming the inability to comply with this requirement in addition to any information requested by the CAISO to determine the applicability of this exemption.

ii. Frequency Disturbance Ride-Through Capability

An Asynchronous Generating Facility shall comply with the off nominal frequency requirements set forth in the WECC Under Frequency Load Shedding Relay Application Guide or successor requirements as they may be amended from time to time.

iii. Power Factor Design Criteria (Reactive Power)

1. An Asynchronous Generating Facility shall operate within a power factor within the range of 0.95 leading to 0.95 lagging, measured at the Point of Interconnection as defined in this LGIA in order to maintain a specified voltage schedule, if the Phase II Interconnection Study shows that such a requirement is necessary to ensure safety or reliability. The power factor range standard can be met by using, for example, power electronics designed to supply this level of reactive capability (taking into account any limitations due to voltage level, real power output, etc.) or fixed and switched capacitors, or a combination of the two, if agreed to by the Participating TO and CAISO. The Interconnection Customer shall not disable power factor equipment while the Asynchronous Generating Facility is in operation. Asynchronous Generating Facilities shall also be able to provide sufficient dynamic voltage support in lieu of the power system stabilizer and automatic voltage regulation at the generator excitation system if the Phase II Interconnection Study shows this to be required for system safety or reliability.

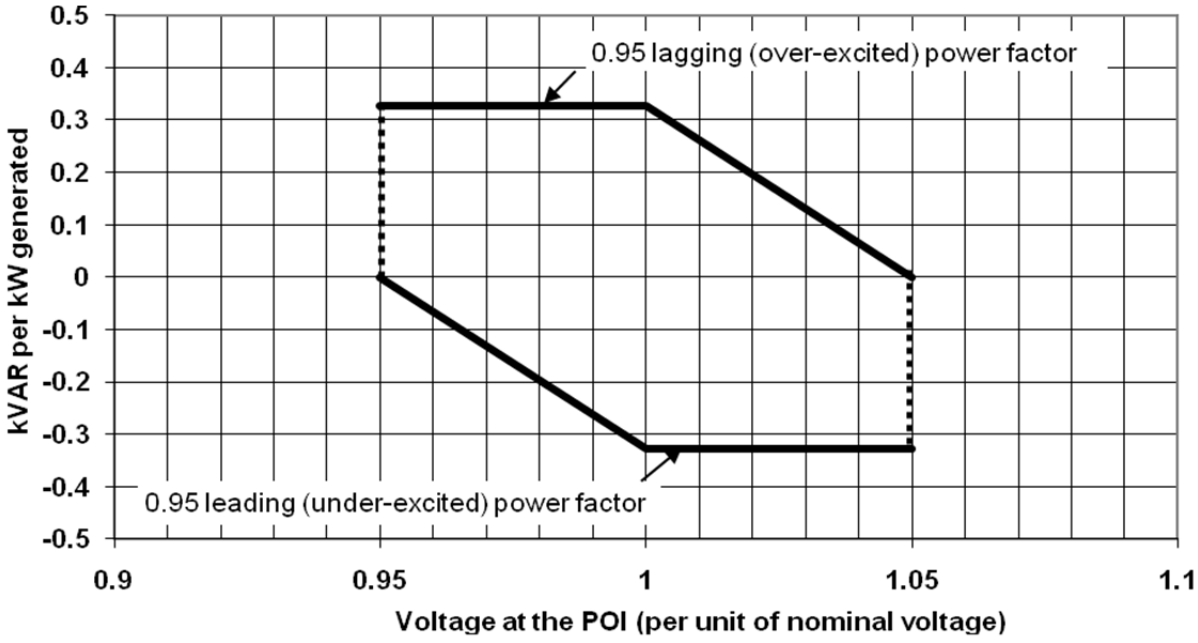

iv. Supervisory Control and Data Acquisition (SCADA) Capability

An Asynchronous Generating Facility shall provide SCADA capability to transmit data and receive instructions from the Participating TO and CAISO to protect system reliability. The Participating TO and CAISO and the Asynchronous Generating Facility Interconnection Customer shall determine what SCADA information is essential for the proposed Asynchronous Generating Facility, taking into account the size of the plant and its characteristics, location, and importance in maintaining generation resource adequacy and transmission system reliability.

v. Power System Stabilizers (PSS)

Power system stabilizers are not required for Asynchronous Generating Facilities.

STANDARD LARGE GENERATOR INTERCONNECTION AGREEMENT (LGIA) AMONG

THE NEVADA HYDRO COMPANY, INC.
AND

SOUTHERN CALIFORNIA EDISON COMPANY
AND

CALIFORNIA INDEPENDENT SYSTEM OPERATOR CORPORATION

PROJECT: LEAPS TOT132 (Q#72)

TABLE OF CONTENTS

ARTICLE 1. DEFINITIONS 9

ARTICLE 2. EFFECTIVE DATE, TERM AND TERMINATION 17
2.1 Effective Date 17
2.2 Term of Agreement 17
2.3 Termination Procedures 17
2.3.1 Written Notice 17
2.3.2 Default 17
2.3.3 Suspension of Work 17
2.3.4 17
2.4 Termination Costs 17
2.4.1 17
2.4.2 18
2.4.3 18
2.5 Disconnection 18
2.6 Survival 18

ARTICLE 3. REGULATORY FILINGS AND CAISO TARIFF COMPLIANCE 19
3.1 Filing 19
3.2 Agreement Subject to CAISO Tariff 19
3.3 Relationship Between this LGIA and the CAISO Tariff 19
3.4 Relationship Between this LGIA and the QF PGA 19

ARTICLE 4. SCOPE OF SERVICE 19
4.1 Interconnection Service 19
4.2 Provision of Service 20
4.3 Performance Standards 20
4.4 No Transmission Service 20
4.5 Interconnection Customer Provided Services 20

ARTICLE 5. INTERCONNECTION FACILITIES ENGINEERING, PROCUREMENT, AND CONSTRUCTION 20
5.1 Options 20
5.1.1 Standard Option 20
5.1.2 Alternate Option 21
5.1.3 Option to Build 21
5.1.4 Negotiated Option 22
5.2 General Conditions Applicable to Option to Build 22
5.3 Liquidated Damages 24
5.4 Power System Stabilizers 25
5.5 Equipment Procurement 25
5.5.1 25
5.5.2 26

5.5.3 26
5.6 Construction Commencement 26
5.6.1 26
5.6.2 26
5.6.3 26
5.6.4 26
5.7 Work Progress 26
5.8 Information Exchange 26
5.9 Limited Operation 26
5.10 Interconnection Customer's Interconnection Facilities 27
5.10.1 Large Generating Facility and Interconnection Customer's Interconnection Facilities Specifications 27
5.10.2 Participating TO's and CAISO's Review 27
5.10.3 Interconnection Customer's Interconnection Facilities Construction 27
5.10.4 Interconnection Customer to Meet Requirements of the Participating TO's Interconnection Handbook 28
5.11 Participating TO's Interconnection Facilities Construction 28
5.12 Access Rights 29
5.13 Lands of Other Property Owners 29
5.14 Permits 29
5.15 Early Construction of Base Case Facilities 29
5.16 Suspension 30
5.17 Taxes 30
5.17.1 Interconnection Customer Payments Not Taxable 30
5.17.2 Representations and Covenants 30
5.17.3 Indemnification for the Cost Consequences of Current Tax Liability Imposed Upon the Participating TO 31
5.17.4 Tax Gross-Up Amount 32
5.17.5 Private Letter Ruling or Change or Clarification of Law 33
5.17.6 Subsequent Taxable Events 33
5.17.7 Contests 33
5.17.8 Refund 34
5.17.9 Taxes Other Than Income Taxes 36
5.18 Tax Status 36
5.19 Modification 36
5.19.1 General 36
5.19.2 Standards 37
5.19.3 Modification Costs 37

ARTICLE 6. TESTING AND INSPECTION 37
6.1 Pre-Commercial Operation Date Testing and Modifications 37
6.2 Post-Commercial Operation Date Testing and Modifications 38
6.3 Right to Observe Testing 38
6.4 Right to Inspect 38

ARTICLE 7. METERING 38
7.1 General 38
7.2 Check Meters 39
7.3 Participating TO Retail Metering 39

ARTICLE 8. COMMUNICATIONS 39
8.1 Interconnection Customer Obligations 39
8.2 Remote Terminal Unit 39
8.3 No Annexation 40

ARTICLE 9. OPERATIONS 40
9.1 General 40
9.2 Balancing Authority Area Notification 40
9.3 CAISO and Participating TO Obligations 40
9.4 Interconnection Customer Obligations 41
9.5 Start-Up and Synchronization 41
9.6 Reactive Power 41
9.6.1 Power Factor Design Criteria 41
9.6.2 Voltage Schedules 41
9.6.2.1 Governors and Regulators 42
9.6.3 Payment for Reactive Power 43
9.7 Outages and Interruptions 43
9.7.1 Outages 43
9.7.1.1 Outage Authority and Coordination 43
9.7.1.2 Outage Schedules 43
9.7.1.3 Outage Restoration 44
9.7.2 Interruption of Service 44
9.7.2.1 44
9.7.2.2 44
9.7.2.3 44
9.7.2.4 45
9.7.2.5 45
9.7.3 Under-Frequency and Over-Frequency Conditions 45
9.7.4 System Protection and Other Control Requirements 45
9.7.4.1 System Protection Facilities 45
9.7.4.2 46
9.7.4.3 46
9.7.4.4 46
9.7.4.5 46
9.7.4.6 46
9.7.5 Requirements for Protection 46
9.7.6 Power Quality 47
9.8 Switching and Tagging Rules 47
9.9 Use of Interconnection Facilities by Third Parties 47
9.9.1 Purpose of Interconnection Facilities 47
9.9.2 Third Party Users 47

9.10 Disturbance Analysis Data Exchange 48

ARTICLE 10. MAINTENANCE 48
10.1 Participating TO Obligations 48
10.2 Interconnection Customer Obligations 48
10.3 Coordination 48
10.4 Secondary Systems 48
10.5 Operating and Maintenance Expenses 49

ARTICLE 11. PERFORMANCE OBLIGATION 49
11.1 Interconnection Customer's Interconnection Facilities 49
11.2 Participating TO's Interconnection Facilities 49
11.3 Network Upgrades and Distribution Upgrades 49
11.4 Transmission Credits 49
11.4.1 Repayment of Amounts Advanced for Network Upgrades 49
11.4.2 Special Provisions for Affected Systems 50
11.4.3 50
11.5 Provision of Security 51
11.5.1 51
11.5.2 51
11.5.3 51
11.6 Interconnection Customer Compensation 51
11.6.1 Interconnection Customer Compensation for Actions During Emergency Condition 51

ARTICLE 12. INVOICE 52
12.1 General 52
12.2 Final Invoice 52
12.3 Payment 52
12.4 Disputes 53

ARTICLE 13. EMERGENCIES 53
13.1 [Reserved] 53
13.2 Obligations 53
13.3 Notice 53
13.4 Immediate Action 53
13.5 CAISO and Participating TO Authority 54
13.5.1 General 54
13.5.2 Reduction and Disconnection 54
13.6 Interconnection Customer Authority 55
13.7 Limited Liability 55

ARTICLE 14. REGULATORY REQUIREMENTS AND GOVERNING LAWS 55
14.1 Regulatory Requirements 55
14.2 Governing Law 56
14.2.1 56

14.2.2 56
14.2.3 56

ARTICLE 15. NOTICES 56
15.1 General 56
15.2 Billings and Payments 56
15.3 Alternative Forms of Notice 56
15.4 Operations and Maintenance Notice 56

ARTICLE 16. FORCE MAJEURE 57
16.1 Force Majeure 57
16.1.1 57
16.1.2 57

ARTICLE 17. DEFAULT 57
17.1 Default 57
17.1.1 General 57
17.1.2 Right to Terminate 57

ARTICLE 18. INDEMNITY, CONSEQUENTIAL DAMAGES, AND INSURANCE 58
18.1 Indemnity 58
18.1.1 Indemnified Party 58
18.1.2 Indemnifying Party 58
18.1.3 Indemnity Procedures 58
18.2 Consequential Damages 59
18.3 Insurance 59
18.3.1 59
18.3.2 59
18.3.3 60
18.3.4 60
18.3.5 60
18.3.6 60
18.3.7 60
18.3.8 61
18.3.9 61
18.3.10 61
18.3.11 61

ARTICLE 19. ASSIGNMENT 61
19.1 Assignment 61

ARTICLE 20. SEVERABILITY 62
20.1 Severability 62

ARTICLE 21. COMPARABILITY 62
21.1 Comparability 62

ARTICLE 22. CONFIDENTIALITY 62
22.1 Confidentiality 62
22.1.1 Term 63
22.1.2 Scope 63
22.1.3 Release of Confidential Information 63
22.1.4 Rights 64
22.1.5 No Warranties 64
22.1.6 Standard of Care 64
22.1.7 Order of Disclosure 64
22.1.8 Termination of Agreement 64
22.1.9 Remedies 64
22.1.10 Disclosure to FERC, its Staff, or a State 65
22.1.11 65

ARTICLE 23. ENVIRONMENTAL RELEASES 66
23.1 66

ARTICLE 24. INFORMATION REQUIREMENTS 66
24.1 Information Acquisition 66
24.2 Information Submission by Participating TO 66
24.3 Updated Information Submission by Interconnection Customer 66
24.4 Information Supplementation 67

ARTICLE 25. INFORMATION ACCESS AND AUDIT RIGHTS 68
25.1 Information Access 68
25.2 Reporting of Non-Force Majeure Events 68
25.3 Audit Rights 68
25.3.1 68
25.3.2 69
25.4 Audit Rights Periods 69
25.4.1 Audit Rights Period for Construction-Related Accounts and Records 69
25.4.2 Audit Rights Period for All Other Accounts and Records 69
25.5 Audit Results 69
25.5.1 70

ARTICLE 26. SUBCONTRACTORS 70
26.1 General 70
26.2 Responsibility of Principal 70
26.3 No Limitation by Insurance 70

ARTICLE 27. DISPUTES 70
27.1 Submission 70
27.2 External Arbitration Procedures 71

27.3 Arbitration Decisions 71
27.4 Costs 71

ARTICLE 28. REPRESENTATIONS, WARRANTIES AND COVENANTS 72
28.1 General 72
28.1.1 Good Standing 72
28.1.2 Authority 72
28.1.3 No Conflict 72
28.1.4 Consent and Approval 72

ARTICLE 29. [RESERVED] 72

ARTICLE 30. MISCELLANEOUS 73
30.1 Binding Effect 73
30.2 Conflicts 73
30.3 Rules of Interpretation 73
30.4 Entire Agreement 73
30.5 No Third Party Beneficiaries 74
30.6 Waiver 74
30.7 Headings 74
30.8 Multiple Counterparts 74
30.9 Amendment 74
30.10 Modification by the Parties 74
30.11 Reservation of Rights 74
30.12 No Partnership 75
30.13 Joint and Several Obligations 76

Appendices 77

Appendix A Interconnection Facilities, Network Upgrades and Distribution Upgrades

Appendix B Milestones

Appendix C Interconnection Details

Appendix D Security Arrangements Details

Appendix E Commercial Operation Date

Appendix F Addresses for Delivery of Notices and Billings

Appendix G [Not Used]

Appendix H Interconnection Requirements for an Asynchronous Generating Facility

STANDARD LARGE GENERATOR INTERCONNECTION AGREEMENT

THE NEVADA HYDRO COMPANY, INC.

SOUTHERN CALIFORNIA EDISON COMPANY

CALIFORNIA INDEPENDENT SYSTEM OPERATOR CORPORATION

THIS STANDARD LARGE GENERATOR INTERCONNECTION AGREEMENT ("LGIA") is made and entered into this _____ day of _____ 2012, by and among The Nevada Hydro Company, Inc., a corporation organized and existing under the laws of the State/Commonwealth of California ("**Interconnection Customer**" with a Large Generating Facility), Southern California Edison Company, a corporation organized and existing under the laws of the State of California ("**Participating TO**"), and California Independent System Operator Corporation, a California nonprofit public benefit corporation organized and existing under the laws of the State of California ("**CAISO**"). Interconnection Customer, Participating TO, and CAISO each may be referred to as a "Party" or collectively as the "Parties."

RECITALS

WHEREAS, CAISO exercises Operational Control over the CAISO Controlled Grid; and

WHEREAS, the Participating TO owns, operates, and maintains the Participating TO's Transmission System; and

WHEREAS, Interconnection Customer intends to own, lease and/or control and operate the Generating Facility identified as a Large Generating Facility in Appendix C to this LGIA; and

WHEREAS, Interconnection Customer, Participating TO, and CAISO have agreed to enter into this LGIA for the purpose of interconnecting the Large Generating Facility with the Participating TO's Transmission System;

NOW, THEREFORE, in consideration of and subject to the mutual covenants contained herein, it is agreed:

When used in this LGIA, terms with initial capitalization that are not defined in Article 1 shall have the meanings specified in the Article in which they are used.

ARTICLE 1. DEFINITIONS

Adverse System Impact shall mean the negative effects due to technical or operational limits on conductors or equipment being exceeded that may compromise the safety and reliability of the electric system.

Affected System shall mean an electric system other than the CAISO Controlled Grid that may be affected by the proposed interconnection, including the Participating TO's electric system that is not part of the CAISO Controlled Grid.

Affiliate shall mean, with respect to a corporation, partnership or other entity, each such other corporation, partnership or other entity that directly or indirectly, through one or more intermediaries, controls, is controlled by, or is under common control with, such corporation, partnership or other entity.

Applicable Laws and Regulations shall mean all duly promulgated applicable federal, state and local laws, regulations, rules, ordinances, codes, decrees, judgments, directives, or judicial or administrative orders, permits and other duly authorized actions of any Governmental Authority.

Applicable Reliability Council shall mean the Western Electricity Coordinating Council or its successor.

Applicable Reliability Standards shall mean the requirements and guidelines of NERC, the Applicable Reliability Council, and the Balancing Authority Area of the Participating TO's Transmission System to which the Generating Facility is directly connected, including requirements adopted pursuant to Section 215 of the Federal Power Act.

Asynchronous Generating Facility shall mean an induction, doubly-fed, or electronic power generating unit(s) that produces 60 Hz (nominal) alternating current.

Balancing Authority shall mean the responsible entity that integrates resource plans ahead of time, maintains load-interchange-generation balance within a Balancing Authority Area, and supports Interconnection frequency in real time.

Balancing Authority Area shall mean the collection of generation, transmission, and loads within the metered boundaries of the Balancing Authority. The Balancing Authority maintains load-resource balance within this area.

Base Case shall mean the base case power flow, short circuit, and stability data bases used for the Interconnection Studies.

Breach shall mean the failure of a Party to perform or observe any material term or condition of this LGIA.

Breaching Party shall mean a Party that is in Breach of this LGIA.

Business Day shall mean Monday through Friday, excluding federal holidays and the day after Thanksgiving Day.

Calendar Day shall mean any day including Saturday, Sunday or a federal holiday.

Commercial Operation shall mean the status of an Electric Generating Unit at a Generating Facility that has commenced generating electricity for sale, excluding electricity generated during Trial Operation.

Commercial Operation Date of an Electric Generating Unit shall mean the date on which the Electric Generating Unit at the Generating Facility commences Commercial Operation as agreed to by the applicable Participating TO and the Interconnection Customer pursuant to Appendix E to this LGIA.

Confidential Information shall mean any confidential, proprietary or trade secret information of a plan, specification, pattern, procedure, design, device, list, concept, policy or compilation relating to the present or planned business of a Party, which is designated as confidential by the Party supplying the information, whether conveyed orally, electronically, in writing, through inspection, or otherwise, subject to Article 22.1.2.

Default shall mean the failure of a Breaching Party to cure its Breach in accordance with Article 17 of this LGIA.

Distribution System shall mean those non-CAISO-controlled transmission and distribution facilities owned by the Participating TO.

Distribution Upgrades shall mean the additions, modifications, and upgrades to the Participating TO's Distribution System. Distribution Upgrades do not include Interconnection Facilities.

Effective Date shall mean the date on which this LGIA becomes effective upon execution by the Parties subject to acceptance by FERC, or if filed unexecuted, upon the date specified by FERC.

Electric Generating Unit shall mean an individual electric generator and its associated plant and apparatus whose electrical output is capable of being separately identified and metered.

Emergency Condition shall mean a condition or situation: (1) that in the judgment of the Party making the claim is imminently likely to endanger life or property; or (2) that, in the case of the CAISO, is imminently likely (as determined in a non-

discriminatory manner) to cause a material adverse effect on the security of, or damage to, the CAISO Controlled Grid or the electric systems of others to which the CAISO Controlled Grid is directly connected; (3) that, in the case of the Participating TO, is imminently likely (as determined in a non-discriminatory manner) to cause a material adverse effect on the security of, or damage to, the Participating TO's Transmission System, Participating TO's Interconnection Facilities, Distribution System, or the electric systems of others to which the Participating TO's electric system is directly connected; or (4) that, in the case of the Interconnection Customer, is imminently likely (as determined in a non-discriminatory manner) to cause a material adverse effect on the security of, or damage to, the Generating Facility or Interconnection Customer's Interconnection Facilities. System restoration and black start shall be considered Emergency Conditions; provided, that Interconnection Customer is not obligated by this LGIA to possess black start capability.

Environmental Law shall mean Applicable Laws or Regulations relating to pollution or protection of the environment or natural resources.

Federal Power Act shall mean the Federal Power Act, as amended, 16 U.S.C. §§ 791a *et seq*.

FERC shall mean the Federal Energy Regulatory Commission or its successor.

Force Majeure shall mean any act of God, labor disturbance, act of the public enemy, war, insurrection, riot, fire, storm or flood, explosion, breakage or accident to machinery or equipment, any order, regulation or restriction imposed by governmental, military or lawfully established civilian authorities, or any other cause beyond a Party's control. A Force Majeure event does not include acts of negligence or intentional wrongdoing by the Party claiming Force Majeure.

Generating Facility shall mean the Interconnection Customer's Electric Generating Unit(s) used for the production of electricity identified in the Interconnection Customer's Interconnection Request, but shall not include the Interconnection Customer's Interconnection Facilities.

Generating Facility Capacity shall mean the net capacity of the Generating Facility and the aggregate net capacity of the Generating Facility where it includes multiple energy production devices.

Good Utility Practice shall mean any of the practices, methods and acts engaged in or approved by a significant portion of the electric utility industry during the relevant time period, or any of the practices, methods and acts which, in the exercise of reasonable judgment in light of the facts known at the time the decision was made, could have been expected to accomplish the desired result at a reasonable cost consistent with good business practices, reliability, safety and expedition. Good Utility Practice is not intended to be any one of a number of the optimum practices, methods, or acts to the exclusion of all others, but rather to be acceptable practices, methods, or

acts generally accepted in the region.

Governmental Authority shall mean any federal, state, local or other governmental, regulatory or administrative agency, court, commission, department, board, or other governmental subdivision, legislature, rulemaking board, tribunal, or other governmental authority having jurisdiction over the Parties, their respective facilities, or the respective services they provide, and exercising or entitled to exercise any administrative, executive, police, or taxing authority or power; provided, however, that such term does not include the Interconnection Customer, CAISO, Participating TO, or any Affiliate thereof.

Hazardous Substances shall mean any chemicals, materials or substances defined as or included in the definition of "hazardous substances," "hazardous wastes," "hazardous materials," "hazardous constituents," "restricted hazardous materials," "extremely hazardous substances," "toxic substances," "radioactive substances," "contaminants," "pollutants," "toxic pollutants" or words of similar meaning and regulatory effect under any applicable Environmental Law, or any other chemical, material or substance, exposure to which is prohibited, limited or regulated by any applicable Environmental Law.

Initial Synchronization Date shall mean the date upon which an Electric Generating Unit is initially synchronized and upon which Trial Operation begins.

In-Service Date shall mean the date upon which the Interconnection Customer reasonably expects it will be ready to begin use of the Participating TO's Interconnection Facilities to obtain back feed power.

Interconnection Customer's Interconnection Facilities shall mean all facilities and equipment, as identified in Appendix A of this LGIA, that are located between the Generating Facility and the Point of Change of Ownership, including any modification, addition, or upgrades to such facilities and equipment necessary to physically and electrically interconnect the Generating Facility to the Participating TO's Transmission System. Interconnection Customer's Interconnection Facilities are sole use facilities.

Interconnection Facilities shall mean the Participating TO's Interconnection Facilities and the Interconnection Customer's Interconnection Facilities. Collectively, Interconnection Facilities include all facilities and equipment between the Generating Facility and the Point of Interconnection, including any modification, additions or upgrades that are necessary to physically and electrically interconnect the Generating Facility to the Participating TO's Transmission System. Interconnection Facilities are sole use facilities and shall not include Distribution Upgrades, Stand Alone Network Upgrades or Network Upgrades.

Interconnection Facilities Study shall mean the study conducted or caused to be performed by the CAISO, in coordination with the applicable Participating TO(s), or a third party consultant for the Interconnection Customer to determine a list of facilities

(including the Participating TO's Interconnection Facilities, Network Upgrades, and Distribution Upgrades), the cost of those facilities, and the time required to interconnect the Generating Facility with the Participating TO's Transmission System.

Interconnection Facilities Study Agreement shall mean the agreement between the Interconnection Customer and the CAISO for conducting the Interconnection Facilities Study.

Interconnection Feasibility Study shall mean the preliminary evaluation conducted or caused to be performed by the CAISO, in coordination with the applicable Participating TO(s), or a third party consultant for the Interconnection Customer of the system impact and cost of interconnecting the Generating Facility to the Participating TO's Transmission System.

Interconnection Handbook shall mean a handbook, developed by the Participating TO and posted on the Participating TO's web site or otherwise made available by the Participating TO, describing technical and operational requirements for wholesale generators and loads connected to the Participating TO's portion of the CAISO Controlled Grid, as such handbook may be modified or superseded from time to time. Participating TO's standards contained in the Interconnection Handbook shall be deemed consistent with Good Utility Practice and Applicable Reliability Standards. In the event of a conflict between the terms of this LGIA and the terms of the Participating TO's Interconnection Handbook, the terms in this LGIA shall apply.

Interconnection Request shall mean a request, in the form of Appendix 1 to the Standard Large Generator Interconnection Procedures, in accordance with the CAISO Tariff.

Interconnection Service shall mean the service provided by the Participating TO and CAISO associated with interconnecting the Interconnection Customer's Generating Facility to the Participating TO's Transmission System and enabling the CAISO Controlled Grid to receive electric energy and capacity from the Generating Facility at the Point of Interconnection, pursuant to the terms of this LGIA, the Participating TO's Transmission Owner Tariff, and the CAISO Tariff.

Interconnection Study shall mean any of the following studies: the Interconnection Feasibility Study, the Interconnection System Impact Study, and the Interconnection Facilities Study conducted or caused to be performed by the CAISO, in coordination with the applicable Participating TO(s), or a third party consultant for the Interconnection Customer pursuant to the Standard Large Generator Interconnection Procedures.

Interconnection System Impact Study shall mean the engineering study conducted or caused to be performed by the CAISO, in coordination with the applicable Participating TO(s), or a third party consultant for the Interconnection Customer that evaluates the impact of the proposed interconnection on the safety and reliability of the

Participating TO's Transmission System and, if applicable, an Affected System. The study shall identify and detail the system impacts that would result if the Generating Facility were interconnected without project modifications or system modifications, focusing on the Adverse System Impacts identified in the Interconnection Feasibility Study, or to study potential impacts, including but not limited to those identified in the Scoping Meeting as described in the Standard Large Generator Interconnection Procedures.

IRS shall mean the Internal Revenue Service.

CAISO Controlled Grid shall mean the system of transmission lines and associated facilities of the parties to the Transmission Control Agreement that have been placed under the CAISO's Operational Control.

CAISO Tariff shall mean the CAISO's tariff, as filed with FERC, and as amended or supplemented from time to time, or any successor tariff.

Large Generating Facility shall mean a Generating Facility having a Generating Facility Capacity of more than 20 MW.

Loss shall mean any and all damages, losses, and claims, including claims and actions relating to injury to or death of any person or damage to property, demand, suits, recoveries, costs and expenses, court costs, attorney fees, and all other obligations by or to third parties.

Material Modification shall mean those modifications that have a material impact on the cost or timing of any Interconnection Request or any other valid interconnection request with a later queue priority date.

Metering Equipment shall mean all metering equipment installed or to be installed for measuring the output of the Generating Facility pursuant to this LGIA at the metering points, including but not limited to instrument transformers, MWh-meters, data acquisition equipment, transducers, remote terminal unit, communications equipment, phone lines, and fiber optics.

NERC shall mean the North American Electric Reliability Corporation or its successor organization.

Network Upgrades shall be Participating TO's Delivery Network Upgrades and Participating TO's Reliability Network Upgrades.

Operational Control shall mean the rights of the CAISO under the Transmission Control Agreement and the CAISO Tariff to direct the parties to the Transmission Control Agreement how to operate their transmission lines and facilities and other electric plant affecting the reliability of those lines and facilities for the purpose of affording comparable non-discriminatory transmission access and meeting applicable

reliability criteria.

Participating TO's Delivery Network Upgrades shall mean the additions, modifications, and upgrades to the Participating TO's Transmission System at or beyond the Point of Interconnection, other than Reliability Network Upgrades, identified in the Interconnection Studies, as identified in Appendix A, to relieve constraints on the CAISO Controlled Grid.

Participating TO's Interconnection Facilities shall mean all facilities and equipment owned, controlled or operated by the Participating TO from the Point of Change of Ownership to the Point of Interconnection as identified in Appendix A to this LGIA, including any modifications, additions or upgrades to such facilities and equipment. Participating TO's Interconnection Facilities are sole use facilities and shall not include Distribution Upgrades, Stand Alone Network Upgrades or Network Upgrades.

Participating TO's Reliability Network Upgrades shall mean the additions, modifications, and upgrades to the Participating TO's Transmission System at or beyond the Point of Interconnection, identified in the Interconnection Studies, as identified in Appendix A, necessary to interconnect the Large Generating Facility safely and reliably to the Participating TO's Transmission System, which would not have been necessary but for the interconnection of the Large Generating Facility, including additions, modifications, and upgrades necessary to remedy short circuit or stability problems resulting from the interconnection of the Large Generating Facility to the Participating TO's Transmission System. Participating TO's Reliability Network Upgrades also include, consistent with Applicable Reliability Council practice, the Participating TO's facilities necessary to mitigate any adverse impact the Large Generating Facility's interconnection may have on a path's Applicable Reliability Council rating.

Participating TO's Transmission System shall mean the facilities owned and operated by the Participating TO and that have been placed under the CAISO's Operational Control, which facilities form part of the CAISO Controlled Grid.

Party or Parties shall mean the Participating TO, CAISO, Interconnection Customer or the applicable combination of the above.

Point of Change of Ownership shall mean the point, as set forth in Appendix A to this LGIA, where the Interconnection Customer's Interconnection Facilities connect to the Participating TO's Interconnection Facilities.

Point of Interconnection shall mean the point, as set forth in Appendix A to this LGIA, where the Interconnection Facilities connect to the Participating TO's Transmission System.

Qualifying Facility shall mean a qualifying cogeneration facility or qualifying small

power production facility, as defined in the Code of Federal Regulations, Title 18, Part 292 (18 C.F.R. §292).

QF PGA shall mean a Qualifying Facility Participating Generator Agreement specifying the special provisions for the operating relationship between a Qualifying Facility and the CAISO, a pro forma version of which is set forth in Appendix B.3 of the CAISO Tariff.

Reasonable Efforts shall mean, with respect to an action required to be attempted or taken by a Party under this LGIA, efforts that are timely and consistent with Good Utility Practice and are otherwise substantially equivalent to those a Party would use to protect its own interests.

Scoping Meeting shall mean the meeting among representatives of the Interconnection Customer, the Participating TO(s), other Affected Systems, and the CAISO conducted for the purpose of discussing alternative interconnection options, to exchange information including any transmission data and earlier study evaluations that would be reasonably expected to impact such interconnection options, to analyze such information, and to determine the potential feasible Points of Interconnection.

Stand Alone Network Upgrades shall mean Network Upgrades that the Interconnection Customer may construct without affecting day-to-day operations of the CAISO Controlled Grid or Affected Systems during their construction. The Participating TO, the CAISO, and the Interconnection Customer must agree as to what constitutes Stand Alone Network Upgrades and identify them in Appendix A to this LGIA.

Standard Large Generator Interconnection Procedures (LGIP) shall mean the CAISO protocol that sets forth the interconnection procedures applicable to an Interconnection Request pertaining to a Large Generating Facility that is included in CAISO Tariff Appendix U.

System Protection Facilities shall mean the equipment, including necessary protection signal communications equipment, that protects (1) the Participating TO's Transmission System, Participating TO's Interconnection Facilities, CAISO Controlled Grid, and Affected Systems from faults or other electrical disturbances occurring at the Generating Facility and (2) the Generating Facility from faults or other electrical system disturbances occurring on the CAISO Controlled Grid, Participating TO's Interconnection Facilities, and Affected Systems or on other delivery systems or other generating systems to which the CAISO Controlled Grid is directly connected.

Transmission Control Agreement shall mean CAISO FERC Electric Tariff No. 7.

Trial Operation shall mean the period during which the Interconnection Customer is engaged in on-site test operations and commissioning of an Electric Generating Unit prior to Commercial Operation.

ARTICLE 2. EFFECTIVE DATE, TERM AND TERMINATION

2.1 Effective Date. This LGIA shall become effective upon execution by the Parties subject to acceptance by FERC (if applicable), or if filed unexecuted, upon the date specified by FERC. The CAISO and Participating TO shall promptly file this LGIA with FERC upon execution in accordance with Article 3.1, if required.

2.2 Term of Agreement. Subject to the provisions of Article 2.3, this LGIA shall remain in effect for a period of fifty (50) years from the Effective Date and shall be automatically renewed for each successive one-year period thereafter.

2.3 Termination Procedures.

2.3.1 Written Notice. This LGIA may be terminated by the Interconnection Customer after giving the CAISO and the Participating TO ninety (90) Calendar Days advance written notice, or by the CAISO and the Participating TO notifying FERC after the Generating Facility permanently ceases Commercial Operation.

2.3.2 Default. A Party may terminate this LGIA in accordance with Article 17.

2.3.3 Suspension of Work. This LGIA may be deemed terminated in accordance with Article 5.16.

2.3.4 Notwithstanding Articles 2.3.1, 2.3.2, and 2.3.3, no termination shall become effective until the Parties have complied with all Applicable Laws and Regulations applicable to such termination, including the filing with FERC of a notice of termination of this LGIA, which notice has been accepted for filing by FERC.

2.4 Termination Costs. If this LGIA terminates pursuant to Article 2.3 above, the Interconnection Customer shall pay all costs incurred or irrevocably committed to be incurred in association with the Interconnection Customer's interconnection (including any cancellation costs relating to orders or contracts for Interconnection Facilities and equipment) and other expenses, including any Network Upgrades and Distribution Upgrades for which the Participating TO or CAISO has incurred expenses or has irrevocably committed to incur expenses and has not been reimbursed by the Interconnection Customer, as of the date of the other Parties' receipt of the notice of termination, subject to the limitations set forth in this Article 2.4. Nothing in this Article 2.4 shall limit the Parties' rights under Article 17.

2.4.1 Notwithstanding the foregoing, in the event of termination by a Party, all Parties shall use commercially Reasonable Efforts to mitigate the costs,

damages and charges arising as a consequence of termination. With respect to any portion of the Participating TO's Interconnection Facilities that have not yet been constructed or installed, the Participating TO shall to the extent possible and with the Interconnection Customer's authorization cancel any pending orders of, or return, any materials or equipment for, or contracts for construction of, such facilities; provided that in the event the Interconnection Customer elects not to authorize such cancellation, the Interconnection Customer shall assume all payment obligations with respect to such materials, equipment, and contracts, and the Participating TO shall deliver such material and equipment, and, if necessary, assign such contracts, to the Interconnection Customer as soon as practicable, at the Interconnection Customer's expense. To the extent that the Interconnection Customer has already paid the Participating TO for any or all such costs of materials or equipment not taken by the Interconnection Customer, the Participating TO shall promptly refund such amounts to the Interconnection Customer, less any costs, including penalties, incurred by the Participating TO to cancel any pending orders of or return such materials, equipment, or contracts.

2.4.2 The Participating TO may, at its option, retain any portion of such materials, equipment, or facilities that the Interconnection Customer chooses not to accept delivery of, in which case the Participating TO shall be responsible for all costs associated with procuring such materials, equipment, or facilities.

2.4.3 With respect to any portion of the Interconnection Facilities, and any other facilities already installed or constructed pursuant to the terms of this LGIA, Interconnection Customer shall be responsible for all costs associated with the removal, relocation or other disposition or retirement of such materials, equipment, or facilities.

2.5 Disconnection. Upon termination of this LGIA, the Parties will take all appropriate steps to disconnect the Large Generating Facility from the Participating TO's Transmission System. All costs required to effectuate such disconnection shall be borne by the terminating Party, unless such termination resulted from the non-terminating Party's Default of this LGIA or such non-terminating Party otherwise is responsible for these costs under this LGIA.

2.6 Survival. This LGIA shall continue in effect after termination to the extent necessary to provide for final billings and payments and for costs incurred hereunder, including billings and payments pursuant to this LGIA; to permit the determination and enforcement of liability and indemnification obligations arising from acts or events that occurred while this LGIA was in effect; and to permit each Party to have access to the lands of the other Parties pursuant to this LGIA or other applicable agreements, to disconnect, remove or salvage its own facilities and equipment.

ARTICLE 3. REGULATORY FILINGS AND CAISO TARIFF COMPLIANCE

3.1 **Filing**. The Participating TO and the CAISO shall file this LGIA (and any amendment hereto) with the appropriate Governmental Authority(ies), if required. The Interconnection Customer may request that any information so provided be subject to the confidentiality provisions of Article 22. If the Interconnection Customer has executed this LGIA, or any amendment thereto, the Interconnection Customer shall reasonably cooperate with the Participating TO and CAISO with respect to such filing and to provide any information reasonably requested by the Participating TO or CAISO needed to comply with applicable regulatory requirements.

3.2 **Agreement Subject to CAISO Tariff**. The Interconnection Customer will comply with all applicable provisions of the CAISO Tariff, including the LGIP.

3.3 **Relationship Between this LGIA and the CAISO Tariff.** With regard to rights and obligations between the Participating TO and the Interconnection Customer, if and to the extent a matter is specifically addressed by a provision of this LGIA (including any appendices, schedules or other attachments to this LGIA), the provisions of this LGIA shall govern. If and to the extent a provision of this LGIA is inconsistent with the CAISO Tariff and dictates rights and obligations between the CAISO and the Participating TO or the CAISO and the Interconnection Customer, the CAISO Tariff shall govern.

3.4 **Relationship Between this LGIA and the QF PGA.** With regard to the rights and obligations of a Qualifying Facility that has entered into a QF PGA with the CAISO and has entered into this LGIA, if and to the extent a matter is specifically addressed by a provision of the QF PGA that is inconsistent with this LGIA, the terms of the QF PGA shall govern.

ARTICLE 4. SCOPE OF SERVICE

4.1 **Interconnection Service.** Interconnection Service allows the Interconnection Customer to connect the Large Generating Facility to the Participating TO's Transmission System and be eligible to deliver the Large Generating Facility's output using the available capacity of the CAISO Controlled Grid. To the extent the Interconnection Customer wants to receive Interconnection Service, the Participating TO shall construct facilities identified in Appendices A and C that the Participating TO is responsible to construct.

Interconnection Service does not necessarily provide the Interconnection Customer with the capability to physically deliver the output of its Large Generating Facility to any particular load on the CAISO Controlled Grid without

incurring congestion costs. In the event of transmission constraints on the CAISO Controlled Grid, the Interconnection Customer's Large Generating Facility shall be subject to the applicable congestion management procedures in the CAISO Tariff in the same manner as all other resources.

4.2 Provision of Service. The Participating TO and the CAISO shall provide Interconnection Service for the Large Generating Facility.

4.3 Performance Standards. Each Party shall perform all of its obligations under this LGIA in accordance with Applicable Laws and Regulations, Applicable Reliability Standards, and Good Utility Practice, and to the extent a Party is required or prevented or limited in taking any action by such regulations and standards, such Party shall not be deemed to be in Breach of this LGIA for its compliance therewith. If such Party is the CAISO or Participating TO, then that Party shall amend the LGIA and submit the amendment to FERC for approval.

4.4 No Transmission Service. The execution of this LGIA does not constitute a request for, nor the provision of, any transmission service under the CAISO Tariff, and does not convey any right to deliver electricity to any specific customer or point of delivery.

4.5 Interconnection Customer Provided Services. The services provided by Interconnection Customer under this LGIA are set forth in Article 9.6 and Article 13.5.1. Interconnection Customer shall be paid for such services in accordance with Article 11.6.

ARTICLE 5. INTERCONNECTION FACILITIES ENGINEERING, PROCUREMENT, AND CONSTRUCTION

Interconnection Facilities, Network Upgrades, and Distribution Upgrades shall be studied, designed, and constructed pursuant to Good Utility Practice. Such studies, design and construction shall be based on the assumed accuracy and completeness of all technical information received by the Participating TO and the CAISO from the Interconnection Customer associated with interconnecting the Large Generating Facility.

5.1 Options. Unless otherwise mutually agreed among the Parties, the Interconnection Customer shall select the In-Service Date, Initial Synchronization Date, and Commercial Operation Date; and either Standard Option or Alternate Option set forth below for completion of the Participating TO's Interconnection Facilities and Network Upgrades as set forth in Appendix A, Interconnection Facilities, Network Upgrades, and Distribution Upgrades, and such dates and selected option shall be set forth in Appendix B, Milestones.

5.1.1 Standard Option. The Participating TO shall design, procure, and

construct the Participating TO's Interconnection Facilities, Network Upgrades, and Distribution Upgrades, using Reasonable Efforts to complete the Participating TO's Interconnection Facilities, Network Upgrades, and Distribution Upgrades by the dates set forth in Appendix B, Milestones. The Participating TO shall not be required to undertake any action which is inconsistent with its standard safety practices, its material and equipment specifications, its design criteria and construction procedures, its labor agreements, and Applicable Laws and Regulations. In the event the Participating TO reasonably expects that it will not be able to complete the Participating TO's Interconnection Facilities, Network Upgrades, and Distribution Upgrades by the specified dates, the Participating TO shall promptly provide written notice to the Interconnection Customer and the CAISO and shall undertake Reasonable Efforts to meet the earliest dates thereafter.

5.1.2 Alternate Option. If the dates designated by the Interconnection Customer are acceptable to the Participating TO, the Participating TO shall so notify the Interconnection Customer within thirty (30) Calendar Days, and shall assume responsibility for the design, procurement and construction of the Participating TO's Interconnection Facilities by the designated dates.

If the Participating TO subsequently fails to complete the Participating TO's Interconnection Facilities by the In-Service Date, to the extent necessary to provide back feed power; or fails to complete Network Upgrades by the Initial Synchronization Date to the extent necessary to allow for Trial Operation at full power output, unless other arrangements are made by the Parties for such Trial Operation; or fails to complete the Network Upgrades by the Commercial Operation Date, as such dates are reflected in Appendix B, Milestones; the Participating TO shall pay the Interconnection Customer liquidated damages in accordance with Article 5.3, Liquidated Damages, provided, however, the dates designated by the Interconnection Customer shall be extended day for day for each day that the CAISO refuses to grant clearances to install equipment.

5.1.3 Option to Build. If the dates designated by the Interconnection Customer are not acceptable to the Participating TO, the Participating TO shall so notify the Interconnection Customer within thirty (30) Calendar Days, and unless the Parties agree otherwise, the Interconnection Customer shall have the option to assume responsibility for the design, procurement and construction of the Participating TO's Interconnection Facilities and Stand Alone Network Upgrades. If the Interconnection Customer elects to exercise its option to assume responsibility for the design, procurement and construction of the Participating TO's Interconnection Facilities and Stand Alone Network Upgrades, it shall so notify the Participating TO within thirty (30) Calendar Days of receipt of the Participating TO's

notification that the designated dates are not acceptable to the Participating TO. The Participating TO, CAISO, and Interconnection Customer must agree as to what constitutes Stand Alone Network Upgrades and identify such Stand Alone Network Upgrades in Appendix A to this LGIA. Except for Stand Alone Network Upgrades, the Interconnection Customer shall have no right to construct Network Upgrades under this option.

5.1.4 Negotiated Option. If the Interconnection Customer elects not to exercise its option under Article 5.1.3, Option to Build, the Interconnection Customer shall so notify the Participating TO within thirty (30) Calendar Days of receipt of the Participating TO's notification that the designated dates are not acceptable to the Participating TO, and the Parties shall in good faith attempt to negotiate terms and conditions (including revision of the specified dates and liquidated damages, the provision of incentives or the procurement and construction of a portion of the Participating TO's Interconnection Facilities and Stand Alone Network Upgrades by the Interconnection Customer) pursuant to which the Participating TO is responsible for the design, procurement and construction of the Participating TO's Interconnection Facilities and Network Upgrades. If the Parties are unable to reach agreement on such terms and conditions, the Participating TO shall assume responsibility for the design, procurement and construction of the Participating TO's Interconnection Facilities and Network Upgrades pursuant to Article 5.1.1, Standard Option.

5.2 General Conditions Applicable to Option to Build. If the Interconnection Customer assumes responsibility for the design, procurement and construction of the Participating TO's Interconnection Facilities and Stand Alone Network Upgrades,

(1) the Interconnection Customer shall engineer, procure equipment, and construct the Participating TO's Interconnection Facilities and Stand Alone Network Upgrades (or portions thereof) using Good Utility Practice and using standards and specifications provided in advance by the Participating TO;

(2) the Interconnection Customer's engineering, procurement and construction of the Participating TO's Interconnection Facilities and Stand Alone Network Upgrades shall comply with all requirements of law to which the Participating TO would be subject in the engineering, procurement or construction of the Participating TO's Interconnection Facilities and Stand Alone Network Upgrades;

(3) the Participating TO shall review, and the Interconnection Customer shall obtain the Participating TO's approval of, the engineering design, equipment acceptance tests, and the construction of the Participating TO's

Interconnection Facilities and Stand Alone Network Upgrades, which approval shall not be unreasonably withheld, and the CAISO may, at its option, review the engineering design, equipment acceptance tests, and the construction of the Participating TO's Interconnection Facilities and Stand Alone Network Upgrades;

(4) prior to commencement of construction, the Interconnection Customer shall provide to the Participating TO, with a copy to the CAISO for informational purposes, a schedule for construction of the Participating TO's Interconnection Facilities and Stand Alone Network Upgrades, and shall promptly respond to requests for information from the Participating TO;

(5) at any time during construction, the Participating TO shall have the right to gain unrestricted access to the Participating TO's Interconnection Facilities and Stand Alone Network Upgrades and to conduct inspections of the same;

(6) at any time during construction, should any phase of the engineering, equipment procurement, or construction of the Participating TO's Interconnection Facilities and Stand Alone Network Upgrades not meet the standards and specifications provided by the Participating TO, the Interconnection Customer shall be obligated to remedy deficiencies in that portion of the Participating TO's Interconnection Facilities and Stand Alone Network Upgrades;

(7) the Interconnection Customer shall indemnify the CAISO and Participating TO for claims arising from the Interconnection Customer's construction of the Participating TO's Interconnection Facilities and Stand Alone Network Upgrades under the terms and procedures applicable to Article 18.1 Indemnity;

(8) the Interconnection Customer shall transfer control of the Participating TO's Interconnection Facilities to the Participating TO and shall transfer Operational Control of Stand Alone Network Upgrades to the CAISO;

(9) unless the Parties otherwise agree, the Interconnection Customer shall transfer ownership of the Participating TO's Interconnection Facilities and Stand Alone Network Upgrades to the Participating TO. As soon as reasonably practicable, but within twelve months after completion of the construction of the Participating TO’s Interconnection Facilities and Stand Alone Network Upgrades, the Interconnection Customer shall provide an invoice of the final cost of the construction of the Participating TO’s Interconnection Facilities and Stand Alone Network Upgrades to the Participating TO, which invoice shall set forth such costs in sufficient detail to enable the Participating TO to reflect the proper costs of such facilities

in its transmission rate base and to identify the investment upon which refunds will be provided;

(10) the Participating TO shall accept for operation and maintenance the Participating TO's Interconnection Facilities and Stand Alone Network Upgrades to the extent engineered, procured, and constructed in accordance with this Article 5.2; and

(11) the Interconnection Customer's engineering, procurement and construction of the Participating TO's Interconnection Facilities and Stand Alone Network Upgrades shall comply with all requirements of the "Option to Build" conditions set forth in Appendix C. Interconnection Customer shall deliver to the Participating TO "as-built" drawings, information, and any other documents that are reasonably required by the Participating TO to assure that the Interconnection Facilities and Stand-Alone Network Upgrades are built to the standards and specifications required by the Participating TO.

5.3 Liquidated Damages. The actual damages to the Interconnection Customer, in the event the Participating TO's Interconnection Facilities or Network Upgrades are not completed by the dates designated by the Interconnection Customer and accepted by the Participating TO pursuant to subparagraphs 5.1.2 or 5.1.4, above, may include Interconnection Customer's fixed operation and maintenance costs and lost opportunity costs. Such actual damages are uncertain and impossible to determine at this time. Because of such uncertainty, any liquidated damages paid by the Participating TO to the Interconnection Customer in the event that the Participating TO does not complete any portion of the Participating TO's Interconnection Facilities or Network Upgrades by the applicable dates, shall be an amount equal to ½ of 1 percent per day of the actual cost of the Participating TO's Interconnection Facilities and Network Upgrades, in the aggregate, for which the Participating TO has assumed responsibility to design, procure and construct.

However, in no event shall the total liquidated damages exceed 20 percent of the actual cost of the Participating TO's Interconnection Facilities and Network Upgrades for which the Participating TO has assumed responsibility to design, procure, and construct. The foregoing payments will be made by the Participating TO to the Interconnection Customer as just compensation for the damages caused to the Interconnection Customer, which actual damages are uncertain and impossible to determine at this time, and as reasonable liquidated damages, but not as a penalty or a method to secure performance of this LGIA. Liquidated damages, when the Parties agree to them, are the exclusive remedy for the Participating TO's failure to meet its schedule.

No liquidated damages shall be paid to the Interconnection Customer if: (1) the Interconnection Customer is not ready to commence use of the Participating TO's

Interconnection Facilities or Network Upgrades to take the delivery of power for the Electric Generating Unit's Trial Operation or to export power from the Electric Generating Unit on the specified dates, unless the Interconnection Customer would have been able to commence use of the Participating TO's Interconnection Facilities or Network Upgrades to take the delivery of power for Electric Generating Unit's Trial Operation or to export power from the Electric Generating Unit, but for the Participating TO's delay; (2) the Participating TO's failure to meet the specified dates is the result of the action or inaction of the Interconnection Customer or any other interconnection customer who has entered into an interconnection agreement with the CAISO and/or Participating TO, action or inaction by the CAISO, or any cause beyond the Participating TO's reasonable control or reasonable ability to cure; (3) the Interconnection Customer has assumed responsibility for the design, procurement and construction of the Participating TO's Interconnection Facilities and Stand Alone Network Upgrades; or (4) the Parties have otherwise agreed.

In no event shall the CAISO have any responsibility or liability to the Interconnection Customer for liquidated damages pursuant to the provisions of this Article 5.3.

5.4 Power System Stabilizers. The Interconnection Customer shall procure, install, maintain and operate Power System Stabilizers in accordance with the guidelines and procedures established by the Applicable Reliability Council and in accordance with the provisions of Section 4.6.5.1 of the CAISO Tariff. The CAISO reserves the right to establish reasonable minimum acceptable settings for any installed Power System Stabilizers, subject to the design and operating limitations of the Large Generating Facility. If the Large Generating Facility's Power System Stabilizers are removed from service or not capable of automatic operation, the Interconnection Customer shall immediately notify the CAISO and the Participating TO and restore the Power System Stabilizers to operation as soon as possible. The CAISO shall have the right to order the reduction in output or disconnection of the Large Generating Facility if the reliability of the CAISO Controlled Grid would be adversely affected as a result of improperly tuned Power System Stabilizers. The requirements of this Article 5.4 shall apply to Asynchronous Generating Facilities in accordance with Appendix H.

5.5 Equipment Procurement. If responsibility for construction of the Participating TO's Interconnection Facilities or Network Upgrades is to be borne by the Participating TO, then the Participating TO shall commence design of the Participating TO's Interconnection Facilities or Network Upgrades and procure necessary equipment as soon as practicable after all of the following conditions are satisfied, unless the Parties otherwise agree in writing:

5.5.1 The CAISO, in coordination with the applicable Participating TO(s), has completed the Interconnection Facilities Study pursuant to the Interconnection Facilities Study Agreement;

5.5.2 The Participating TO has received written authorization to proceed with design and procurement from the Interconnection Customer by the date specified in Appendix B, Milestones; and

5.5.3 The Interconnection Customer has provided security to the Participating TO in accordance with Article 11.5 by the dates specified in Appendix B, Milestones.

5.6 Construction Commencement. The Participating TO shall commence construction of the Participating TO's Interconnection Facilities and Network Upgrades for which it is responsible as soon as practicable after the following additional conditions are satisfied:

5.6.1 Approval of the appropriate Governmental Authority has been obtained for any facilities requiring regulatory approval;

5.6.2 Necessary real property rights and rights-of-way have been obtained, to the extent required for the construction of a discrete aspect of the Participating TO's Interconnection Facilities and Network Upgrades;

5.6.3 The Participating TO has received written authorization to proceed with construction from the Interconnection Customer by the date specified in Appendix B, Milestones; and

5.6.4 The Interconnection Customer has provided payment and security to the Participating TO in accordance with Article 11.5 by the dates specified in Appendix B, Milestones.

5.7 Work Progress. The Parties will keep each other advised periodically as to the progress of their respective design, procurement and construction efforts. Any Party may, at any time, request a progress report from another Party. If, at any time, the Interconnection Customer determines that the completion of the Participating TO's Interconnection Facilities will not be required until after the specified In-Service Date, the Interconnection Customer will provide written notice to the Participating TO and CAISO of such later date upon which the completion of the Participating TO's Interconnection Facilities will be required.

5.8 Information Exchange. As soon as reasonably practicable after the Effective Date, the Parties shall exchange information regarding the design and compatibility of the Interconnection Customer's Interconnection Facilities and Participating TO's Interconnection Facilities and compatibility of the Interconnection Facilities with the Participating TO's Transmission System, and shall work diligently and in good faith to make any necessary design changes.

5.9 Limited Operation. If any of the Participating TO's Interconnection Facilities or

Network Upgrades are not reasonably expected to be completed prior to the Commercial Operation Date of the Electric Generating Unit, the Participating TO and/or CAISO, as applicable, shall, upon the request and at the expense of the Interconnection Customer, perform operating studies on a timely basis to determine the extent to which the Electric Generating Unit and the Interconnection Customer's Interconnection Facilities may operate prior to the completion of the Participating TO's Interconnection Facilities or Network Upgrades consistent with Applicable Laws and Regulations, Applicable Reliability Standards, Good Utility Practice, and this LGIA. The Participating TO and CAISO shall permit Interconnection Customer to operate the Electric Generating Unit and the Interconnection Customer's Interconnection Facilities in accordance with the results of such studies.

5.10 Interconnection Customer's Interconnection Facilities. The Interconnection Customer shall, at its expense, design, procure, construct, own and install the Interconnection Customer's Interconnection Facilities, as set forth in Appendix A.

5.10.1 Large Generating Facility and Interconnection Customer's Interconnection Facilities Specifications. The Interconnection Customer shall submit initial specifications for the Interconnection Customer's Interconnection Facilities and Large Generating Facility, including System Protection Facilities, to the Participating TO and the CAISO at least one hundred eighty (180) Calendar Days prior to the Initial Synchronization Date; and final specifications for review and comment at least ninety (90) Calendar Days prior to the Initial Synchronization Date. The Participating TO and the CAISO shall review such specifications pursuant to this LGIA and the LGIP to ensure that the Interconnection Customer's Interconnection Facilities and Large Generating Facility are compatible with the technical specifications, operational control, safety requirements, and any other applicable requirements of the Participating TO and the CAISO and comment on such specifications within thirty (30) Calendar Days of the Interconnection Customer's submission. All specifications provided hereunder shall be deemed confidential.

5.10.2 Participating TO's and CAISO's Review. The Participating TO's and the CAISO's review of the Interconnection Customer's final specifications shall not be construed as confirming, endorsing, or providing a warranty as to the design, fitness, safety, durability or reliability of the Large Generating Facility, or the Interconnection Customer's Interconnection Facilities. Interconnection Customer shall make such changes to the Interconnection Customer's Interconnection Facilities as may reasonably be required by the Participating TO or the CAISO, in accordance with Good Utility Practice, to ensure that the Interconnection Customer's Interconnection Facilities are compatible with the technical specifications, Operational Control, and safety requirements of the Participating TO or the CAISO.

5.10.3 Interconnection Customer's Interconnection Facilities Construction.

The Interconnection Customer's Interconnection Facilities shall be designed and constructed in accordance with Good Utility Practice. Within one hundred twenty (120) Calendar Days after the Commercial Operation Date, unless the Participating TO and Interconnection Customer agree on another mutually acceptable deadline, the Interconnection Customer shall deliver to the Participating TO and CAISO "as-built" drawings, information and documents for the Interconnection Customer's Interconnection Facilities and the Electric Generating Unit(s), such as: a one-line diagram, a site plan showing the Large Generating Facility and the Interconnection Customer's Interconnection Facilities, plan and elevation drawings showing the layout of the Interconnection Customer's Interconnection Facilities, a relay functional diagram, relaying AC and DC schematic wiring diagrams and relay settings for all facilities associated with the Interconnection Customer's step-up transformers, the facilities connecting the Large Generating Facility to the step-up transformers and the Interconnection Customer's Interconnection Facilities, and the impedances (determined by factory tests) for the associated step-up transformers and the Electric Generating Units. The Interconnection Customer shall provide the Participating TO and the CAISO specifications for the excitation system, automatic voltage regulator, Large Generating Facility control and protection settings, transformer tap settings, and communications, if applicable. Any deviations from the relay settings, machine specifications, and other specifications originally submitted by the Interconnection Customer shall be assessed by the Participating TO and the CAISO pursuant to the appropriate provisions of this LGIA and the LGIP.

5.10.4 Interconnection Customer to Meet Requirements of the Participating TO's Interconnection Handbook. The Interconnection Customer shall comply with the Participating TO's Interconnection Handbook.

5.11 Participating TO's Interconnection Facilities Construction. The Participating TO's Interconnection Facilities shall be designed and constructed in accordance with Good Utility Practice. Upon request, within one hundred twenty (120) Calendar Days after the Commercial Operation Date, unless the Participating TO and Interconnection Customer agree on another mutually acceptable deadline, the Participating TO shall deliver to the Interconnection Customer and the CAISO the following "as-built" drawings, information and documents for the Participating TO's Interconnection Facilities. No as-built drawings will be provided.

The Participating TO will obtain control for operating and maintenance purposes of the Participating TO's Interconnection Facilities and Stand Alone Network Upgrades upon completion of such facilities. Pursuant to Article 5.2, the CAISO will obtain Operational Control of the Stand Alone Network Upgrades prior to the Commercial Operation Date.

5.12 Access Rights. Upon reasonable notice and supervision by a Party, and subject to any required or necessary regulatory approvals, a Party ("Granting Party") shall furnish at no cost to the other Party ("Access Party") any rights of use, licenses, rights of way and easements with respect to lands owned or controlled by the Granting Party, its agents (if allowed under the applicable agency agreement), or any Affiliate, that are necessary to enable the Access Party to obtain ingress and egress to construct, operate, maintain, repair, test (or witness testing), inspect, replace or remove facilities and equipment to: (i) interconnect the Large Generating Facility with the Participating TO's Transmission System; (ii) operate and maintain the Large Generating Facility, the Interconnection Facilities and the Participating TO's Transmission System; and (iii) disconnect or remove the Access Party's facilities and equipment upon termination of this LGIA. In exercising such licenses, rights of way and easements, the Access Party shall not unreasonably disrupt or interfere with normal operation of the Granting Party's business and shall adhere to the safety rules and procedures established in advance, as may be changed from time to time, by the Granting Party and provided to the Access Party.

5.13 Lands of Other Property Owners. If any part of the Participating TO's Interconnection Facilities and/or Network Upgrades are to be installed on property owned by persons other than the Interconnection Customer or Participating TO, the Participating TO shall at the Interconnection Customer's expense use efforts, similar in nature and extent to those that it typically undertakes on its own behalf or on behalf of its Affiliates, including use of its eminent domain authority, and to the extent consistent with state law, to procure from such persons any rights of use, licenses, rights of way and easements that are necessary to construct, operate, maintain, test, inspect, replace or remove the Participating TO's Interconnection Facilities and/or Network Upgrades upon such property.

5.14 Permits. Participating TO and Interconnection Customer shall cooperate with each other in good faith in obtaining all permits, licenses and authorization that are necessary to accomplish the interconnection in compliance with Applicable Laws and Regulations. With respect to this paragraph, the Participating TO shall provide permitting assistance to the Interconnection Customer comparable to that provided to the Participating TO's own, or an Affiliate's generation.

5.15 Early Construction of Base Case Facilities. The Interconnection Customer may request the Participating TO to construct, and the Participating TO shall construct, using Reasonable Efforts to accommodate Interconnection Customer's In-Service Date, all or any portion of any Network Upgrades required for Interconnection Customer to be interconnected to the Participating TO's Transmission System which are included in the Base Case of the Interconnection Studies for the Interconnection Customer, and which also are required to be constructed for another interconnection customer, but where such construction is not scheduled to be completed in time to achieve Interconnection Customer's In-

Service Date.

5.16 Suspension. This Article left intentionally blank.

5.17 Taxes.

5.17.1 Interconnection Customer Payments Not Taxable. The Parties intend that all payments or property transfers made by the Interconnection Customer to the Participating TO for the installation of the Participating TO's Interconnection Facilities and the Network Upgrades shall be non-taxable, either as contributions to capital, or as a refundable advance, in accordance with the Internal Revenue Code and any applicable state income tax laws and shall not be taxable as contributions in aid of construction or otherwise under the Internal Revenue Code and any applicable state income tax laws.

5.17.2 Representations And Covenants. In accordance with IRS Notice 2001-82 and IRS Notice 88-129, the Interconnection Customer represents and covenants that (i) ownership of the electricity generated at the Large Generating Facility will pass to another party prior to the transmission of the electricity on the CAISO Controlled Grid, (ii) for income tax purposes, the amount of any payments and the cost of any property transferred to the Participating TO for the Participating TO's Interconnection Facilities will be capitalized by the Interconnection Customer as an intangible asset and recovered using the straight-line method over a useful life of twenty (20) years, and (iii) any portion of the Participating TO's Interconnection Facilities that is a "dual-use intertie," within the meaning of IRS Notice 88-129, is reasonably expected to carry only a de minimis amount of electricity in the direction of the Large Generating Facility. For this purpose, "de minimis amount" means no more than 5 percent of the total power flows in both directions, calculated in accordance with the "5 percent test" set forth in IRS Notice 88-129. This is not intended to be an exclusive list of the relevant conditions that must be met to conform to IRS requirements for non-taxable treatment.

At the Participating TO's request, the Interconnection Customer shall provide the Participating TO with a report from an independent engineer confirming its representation in clause (iii), above. The Participating TO represents and covenants that the cost of the Participating TO's Interconnection Facilities paid for by the Interconnection Customer without the possibility of refund or credit will have no net effect on the base upon which rates are determined.

5.17.3 Indemnification for the Cost Consequence of Current Tax Liability Imposed Upon the Participating TO. Notwithstanding Article 5.17.1, the Interconnection Customer shall protect, indemnify and hold harmless the

Participating TO from the cost consequences of any current tax liability imposed against the Participating TO as the result of payments or property transfers made by the Interconnection Customer to the Participating TO under this LGIA for Interconnection Facilities, as well as any interest and penalties, other than interest and penalties attributable to any delay caused by the Participating TO.

The Participating TO shall not include a gross-up for the cost consequences of any current tax liability in the amounts it charges the Interconnection Customer under this LGIA unless (i) the Participating TO has determined, in good faith, that the payments or property transfers made by the Interconnection Customer to the Participating TO should be reported as income subject to taxation or (ii) any Governmental Authority directs the Participating TO to report payments or property as income subject to taxation; provided, however, that the Participating TO may require the Interconnection Customer to provide security for Interconnection Facilities, in a form reasonably acceptable to the Participating TO (such as a parental guarantee or a letter of credit), in an amount equal to the cost consequences of any current tax liability under this Article 5.17. The Interconnection Customer shall reimburse the Participating TO for such costs on a fully grossed-up basis, in accordance with Article 5.17.4, within thirty (30) Calendar Days of receiving written notification from the Participating TO of the amount due, including detail about how the amount was calculated.

The indemnification obligation shall terminate at the earlier of (1) the expiration of the ten year testing period and the applicable statute of limitation, as it may be extended by the Participating TO upon request of the IRS, to keep these years open for audit or adjustment, or (2) the occurrence of a subsequent taxable event and the payment of any related indemnification obligations as contemplated by this Article 5.17.

5.17.4 Tax Gross-Up Amount. The Interconnection Customer's liability for the cost consequences of any current tax liability under this Article 5.17 shall be calculated on a fully grossed-up basis. Except as may otherwise be agreed to by the parties, this means that the Interconnection Customer will pay the Participating TO, in addition to the amount paid for the Interconnection Facilities and Network Upgrades, an amount equal to (1) the current taxes imposed on the Participating TO ("Current Taxes") on the excess of (a) the gross income realized by the Participating TO as a result of payments or property transfers made by the Interconnection Customer to the Participating TO under this LGIA (without regard to any payments under this Article 5.17) (the "Gross Income Amount") over (b) the present value of future tax deductions for depreciation that will be available as a result of such payments or property transfers (the "Present Value Depreciation Amount"), plus (2) an additional amount sufficient to

permit the Participating TO to receive and retain, after the payment of all Current Taxes, an amount equal to the net amount described in clause (1).

For this purpose, (i) Current Taxes shall be computed based on the Participating TO's composite federal and state tax rates at the time the payments or property transfers are received and the Participating TO will be treated as being subject to tax at the highest marginal rates in effect at that time (the "Current Tax Rate"), and (ii) the Present Value Depreciation Amount shall be computed by discounting the Participating TO's anticipated tax depreciation deductions as a result of such payments or property transfers by the Participating TO's current weighted average cost of capital. Thus, the formula for calculating the Interconnection Customer's liability to the Participating TO pursuant to this Article 5.17.4 can be expressed as follows: (Current Tax Rate x (Gross Income Amount – Present Value of Tax Depreciation))/(1-Current Tax Rate). Interconnection Customer's estimated tax liability in the event taxes are imposed shall be stated in Appendix A, Interconnection Facilities, Network Upgrades and Distribution Upgrades.

5.17.5 Private Letter Ruling or Change or Clarification of Law. At the Interconnection Customer's request and expense, the Participating TO shall file with the IRS a request for a private letter ruling as to whether any property transferred or sums paid, or to be paid, by the Interconnection Customer to the Participating TO under this LGIA are subject to federal income taxation. The Interconnection Customer will prepare the initial draft of the request for a private letter ruling, and will certify under penalties of perjury that all facts represented in such request are true and accurate to the best of the Interconnection Customer's knowledge. The Participating TO and Interconnection Customer shall cooperate in good faith with respect to the submission of such request, provided, however, the Interconnection Customer and the Participating TO explicitly acknowledge (and nothing herein is intended to alter) Participating TO's obligation under law to certify that the facts presented in the ruling request are true, correct and complete.

The Participating TO shall keep the Interconnection Customer fully informed of the status of such request for a private letter ruling and shall execute either a privacy act waiver or a limited power of attorney, in a form acceptable to the IRS, that authorizes the Interconnection Customer to participate in all discussions with the IRS regarding such request for a private letter ruling. The Participating TO shall allow the Interconnection Customer to attend all meetings with IRS officials about the request and shall permit the Interconnection Customer to prepare the initial drafts of any follow-up letters in connection with the request.

5.17.6 Subsequent Taxable Events. If, within 10 years from the date on which the relevant Participating TO's Interconnection Facilities are placed in service, (i) the Interconnection Customer Breaches the covenants contained in Article 5.17.2, (ii) a "disqualification event" occurs within the meaning of IRS Notice 88-129, or (iii) this LGIA terminates and the Participating TO retains ownership of the Interconnection Facilities and Network Upgrades, the Interconnection Customer shall pay a tax gross-up for the cost consequences of any current tax liability imposed on the Participating TO, calculated using the methodology described in Article 5.17.4 and in accordance with IRS Notice 90-60.

5.17.7 Contests. In the event any Governmental Authority determines that the Participating TO's receipt of payments or property constitutes income that is subject to taxation, the Participating TO shall notify the Interconnection Customer, in writing, within thirty (30) Calendar Days of receiving notification of such determination by a Governmental Authority. Upon the timely written request by the Interconnection Customer and at the Interconnection Customer's sole expense, the Participating TO may appeal, protest, seek abatement of, or otherwise oppose such determination. Upon the Interconnection Customer's written request and sole expense, the Participating TO may file a claim for refund with respect to any taxes paid under this Article 5.17, whether or not it has received such a determination. The Participating TO reserve the right to make all decisions with regard to the prosecution of such appeal, protest, abatement or other contest, including the selection of counsel and compromise or settlement of the claim, but the Participating TO shall keep the Interconnection Customer informed, shall consider in good faith suggestions from the Interconnection Customer about the conduct of the contest, and shall reasonably permit the Interconnection Customer or an Interconnection Customer representative to attend contest proceedings.

The Interconnection Customer shall pay to the Participating TO on a periodic basis, as invoiced by the Participating TO, the Participating TO's documented reasonable costs of prosecuting such appeal, protest, abatement or other contest, including any costs associated with obtaining the opinion of independent tax counsel described in this Article 5.17.7. The Participating TO may abandon any contest if the Interconnection Customer fails to provide payment to the Participating TO within thirty (30) Calendar Days of receiving such invoice.

At any time during the contest, the Participating TO may agree to a settlement either with the Interconnection Customer's consent or, if such consent is refused, after obtaining written advice from independent nationally-recognized tax counsel, selected by the Participating TO, but reasonably acceptable to the Interconnection Customer, that the proposed settlement represents a reasonable settlement given the hazards of

litigation. The Interconnection Customer's obligation shall be based on the amount of the settlement agreed to by the Interconnection Customer, or if a higher amount, so much of the settlement that is supported by the written advice from nationally-recognized tax counsel selected under the terms of the preceding paragraph. The settlement amount shall be calculated on a fully grossed-up basis to cover any related cost consequences of the current tax liability. The Participating TO may also settle any tax controversy without receiving the Interconnection Customer's consent or any such written advice; however, any such settlement will relieve the Interconnection Customer from any obligation to indemnify the Participating TO for the tax at issue in the contest (unless the failure to obtain written advice is attributable to the Interconnection Customer's unreasonable refusal to the appointment of independent tax counsel).

5.17.8 Refund. In the event that (a) a private letter ruling is issued to the Participating TO which holds that any amount paid or the value of any property transferred by the Interconnection Customer to the Participating TO under the terms of this LGIA is not subject to federal income taxation, (b) any legislative change or administrative announcement, notice, ruling or other determination makes it reasonably clear to the Participating TO in good faith that any amount paid or the value of any property transferred by the Interconnection Customer to the Participating TO under the terms of this LGIA is not taxable to the Participating TO, (c) any abatement, appeal, protest, or other contest results in a determination that any payments or transfers made by the Interconnection Customer to the Participating TO are not subject to federal income tax, or (d) if the Participating TO receives a refund from any taxing authority for any overpayment of tax attributable to any payment or property transfer made by the Interconnection Customer to the Participating TO pursuant to this LGIA, the Participating TO shall promptly refund to the Interconnection Customer the following:

(i) any payment made by Interconnection Customer under this Article 5.17 for taxes that is attributable to the amount determined to be non-taxable, together with interest thereon,

(ii) interest on any amounts paid by the Interconnection Customer to the Participating TO for such taxes which the Participating TO did not submit to the taxing authority, calculated in accordance with the methodology set forth in FERC's regulations at 18 C.F.R. §35.19a(a)(2)(iii) from the date payment was made by the Interconnection Customer to the date the Participating TO refunds such payment to the Interconnection Customer, and

(iii) with respect to any such taxes paid by the Participating TO, any refund or credit the Participating TO receives or to which it may be

entitled from any Governmental Authority, interest (or that portion thereof attributable to the payment described in clause (i), above) owed to the Participating TO for such overpayment of taxes (including any reduction in interest otherwise payable by the Participating TO to any Governmental Authority resulting from an offset or credit); provided, however, that the Participating TO will remit such amount promptly to the Interconnection Customer only after and to the extent that the Participating TO has received a tax refund, credit or offset from any Governmental Authority for any applicable overpayment of income tax related to the Participating TO's Interconnection Facilities.

The intent of this provision is to leave the Parties, to the extent practicable, in the event that no taxes are due with respect to any payment for Interconnection Facilities and Network Upgrades hereunder, in the same position they would have been in had no such tax payments been made.

5.17.9 Taxes Other Than Income Taxes. Upon the timely request by the Interconnection Customer, and at the Interconnection Customer's sole expense, the CAISO or Participating TO may appeal, protest, seek abatement of, or otherwise contest any tax (other than federal or state income tax) asserted or assessed against the CAISO or Participating TO for which the Interconnection Customer may be required to reimburse the CAISO or Participating TO under the terms of this LGIA. The Interconnection Customer shall pay to the Participating TO on a periodic basis, as invoiced by the Participating TO, the Participating TO's documented reasonable costs of prosecuting such appeal, protest, abatement, or other contest. The Interconnection Customer, the CAISO, and the Participating TO shall cooperate in good faith with respect to any such contest. Unless the payment of such taxes is a prerequisite to an appeal or abatement or cannot be deferred, no amount shall be payable by the Interconnection Customer to the CAISO or Participating TO for such taxes until they are assessed by a final, non-appealable order by any court or agency of competent jurisdiction. In the event that a tax payment is withheld and ultimately due and payable after appeal, the Interconnection Customer will be responsible for all taxes, interest and penalties, other than penalties attributable to any delay caused by the Participating TO.

5.18 Tax Status. Each Party shall cooperate with the others to maintain the other Parties' tax status. Nothing in this LGIA is intended to adversely affect the CAISO's or any Participating TO's tax exempt status with respect to the issuance of bonds including, but not limited to, Local Furnishing Bonds.

5.19 Modification.

5.19.1 General. The Interconnection Customer or the Participating TO may undertake modifications to its facilities, subject to the provisions of this LGIA and the CAISO Tariff. If a Party plans to undertake a modification that reasonably may be expected to affect the other Parties' facilities, that Party shall provide to the other Parties sufficient information regarding such modification so that the other Parties may evaluate the potential impact of such modification prior to commencement of the work. Such information shall be deemed to be confidential hereunder and shall include information concerning the timing of such modifications and whether such modifications are expected to interrupt the flow of electricity from the Large Generating Facility. The Party desiring to perform such work shall provide the relevant drawings, plans, and specifications to the other Parties at least ninety (90) Calendar Days in advance of the commencement of the work or such shorter period upon which the Parties may agree, which agreement shall not unreasonably be withheld, conditioned or delayed.

In the case of Large Generating Facility modifications that do not require the Interconnection Customer to submit an Interconnection Request, the CAISO or Participating TO shall provide, within thirty (30) Calendar Days (or such other time as the Parties may agree), an estimate of any additional modifications to the CAISO Controlled Grid, Participating TO's Interconnection Facilities, Network Upgrades or Distribution Upgrades necessitated by such Interconnection Customer modification and a good faith estimate of the costs thereof. The Participating TO and the CAISO shall determine if a Large Generating Facility modification is a Material Modification in accordance with the LGIP.

5.19.2 Standards. Any additions, modifications, or replacements made to a Party's facilities shall be designed, constructed and operated in accordance with this LGIA and Good Utility Practice.

5.19.3 Modification Costs. The Interconnection Customer shall not be directly assigned the costs of any additions, modifications, or replacements that the Participating TO makes to the Participating TO's Interconnection Facilities or the Participating TO's Transmission System to facilitate the interconnection of a third party to the Participating TO's Interconnection Facilities or the Participating TO's Transmission System, or to provide transmission service to a third party under the CAISO Tariff. The Interconnection Customer shall be responsible for the costs of any additions, modifications, or replacements to the Interconnection Facilities that may be necessary to maintain or upgrade such Interconnection Facilities consistent with Applicable Laws and Regulations, Applicable Reliability Standards or Good Utility Practice.

ARTICLE 6. TESTING AND INSPECTION

6.1 Pre-Commercial Operation Date Testing and Modifications. Prior to the Commercial Operation Date, the Participating TO shall test the Participating TO's Interconnection Facilities, Network Upgrades, and Distribution Upgrades and the Interconnection Customer shall test the Large Generating Facility and the Interconnection Customer's Interconnection Facilities to ensure their safe and reliable operation. Similar testing may be required after initial operation. Each Party shall make any modifications to its facilities that are found to be necessary as a result of such testing. The Interconnection Customer shall bear the cost of all such testing and modifications. The Interconnection Customer shall not commence initial parallel operation of an Electric Generating Unit with the Participating TO's Transmission System until the Participating TO provides prior written approval, which approval shall not be unreasonably withheld, for operation of such Electric Generating Unit. The Interconnection Customer shall generate test energy at the Large Generating Facility only if it has arranged for the delivery of such test energy.

6.2 Post-Commercial Operation Date Testing and Modifications. Each Party shall at its own expense perform routine inspection and testing of its facilities and equipment in accordance with Good Utility Practice as may be necessary to ensure the continued interconnection of the Large Generating Facility with the Participating TO's Transmission System in a safe and reliable manner. Each Party shall have the right, upon advance written notice, to require reasonable additional testing of the other Party's facilities, at the requesting Party's expense, as may be in accordance with Good Utility Practice.

6.3 Right to Observe Testing. Each Party shall notify the other Parties at least fourteen (14) days in advance of its performance of tests of its Interconnection Facilities or Generating Facility. The other Parties have the right, at their own expense, to observe such testing.

6.4 Right to Inspect. Each Party shall have the right, but shall have no obligation to: (i) observe another Party's tests and/or inspection of any of its System Protection Facilities and other protective equipment, including Power System Stabilizers; (ii) review the settings of another Party's System Protection Facilities and other protective equipment; and (iii) review another Party's maintenance records relative to the Interconnection Facilities, the System Protection Facilities and other protective equipment. A Party may exercise these rights from time to time as it deems necessary upon reasonable notice to the other Party. The exercise or non-exercise by a Party of any such rights shall not be construed as an endorsement or confirmation of any element or condition of the Interconnection Facilities or the System Protection Facilities or other protective equipment or the operation thereof, or as a warranty as to the fitness, safety, desirability, or reliability of same. Any information that a Party obtains through

the exercise of any of its rights under this Article 6.4 shall be deemed to be Confidential Information and treated pursuant to Article 22 of this LGIA.

ARTICLE 7. METERING

7.1 General. Each Party shall comply with the Applicable Reliability Council requirements. The Interconnection Customer and CAISO shall comply with the provisions of the CAISO Tariff regarding metering, including Section 10 of the CAISO Tariff. Unless otherwise agreed by the Participating TO and the Interconnection Customer, the Participating TO may install additional Metering Equipment at the Point of Interconnection prior to any operation of any Electric Generating Unit and shall own, operate, test and maintain such Metering Equipment. Power flows to and from the Large Generating Facility shall be measured at or, at the CAISO's or Participating TO's option for its respective Metering Equipment, compensated to, the Point of Interconnection. The CAISO shall provide metering quantities to the Interconnection Customer upon request in accordance with the CAISO Tariff by directly polling the CAISO's meter data acquisition system. The Interconnection Customer shall bear all reasonable documented costs associated with the purchase, installation, operation, testing and maintenance of the Metering Equipment.

7.2 Check Meters. The Interconnection Customer, at its option and expense, may install and operate, on its premises and on its side of the Point of Interconnection, one or more check meters to check the CAISO-polled meters or the Participating TO's meters. Such check meters shall be for check purposes only and shall not be used for the measurement of power flows for purposes of this LGIA, except in the case that no other means are available on a temporary basis at the option of the CAISO or the Participating TO. The check meters shall be subject at all reasonable times to inspection and examination by the CAISO or Participating TO or their designees. The installation, operation and maintenance thereof shall be performed entirely by the Interconnection Customer in accordance with Good Utility Practice.

7.3 Participating TO Retail Metering. The Participating TO may install retail revenue quality meters and associated equipment, pursuant to the Participating TO's applicable retail tariffs.

ARTICLE 8. COMMUNICATIONS

8.1 Interconnection Customer Obligations. The Interconnection Customer shall maintain satisfactory operating communications with the CAISO in accordance with the provisions of the CAISO Tariff and with the Participating TO's dispatcher or representative designated by the Participating TO. The Interconnection Customer shall provide standard voice line, dedicated voice line and facsimile

communications at its Large Generating Facility control room or central dispatch facility through use of either the public telephone system, or a voice communications system that does not rely on the public telephone system. The Interconnection Customer shall also provide the dedicated data circuit(s) necessary to provide Interconnection Customer data to the CAISO and Participating TO as set forth in Appendix D, Security Arrangements Details. The data circuit(s) shall extend from the Large Generating Facility to the location(s) specified by the CAISO and Participating TO. Any required maintenance of such communications equipment shall be performed by the Interconnection Customer. Operational communications shall be activated and maintained under, but not be limited to, the following events: system paralleling or separation, scheduled and unscheduled shutdowns, equipment clearances, and hourly and daily load data.

8.2 Remote Terminal Unit. Prior to the Initial Synchronization Date of each Electric Generating Unit, a Remote Terminal Unit, or equivalent data collection and transfer equipment acceptable to the Parties, shall be installed by the Interconnection Customer, or by the Participating TO at the Interconnection Customer's expense, to gather accumulated and instantaneous data to be telemetered to the location(s) designated by the CAISO and by the Participating TO through use of a dedicated point-to-point data circuit(s) as indicated in Article 8.1.
Telemetry to the CAISO shall be provided in accordance with the CAISO's technical standards for direct telemetry. For telemetry to the Participating TO, the communication protocol for the data circuit(s) shall be specified by the Participating TO. Instantaneous bi-directional real power and reactive power flow and any other required information must be telemetered directly to the location(s) specified by the Participating TO.

Each Party will promptly advise the other Parties if it detects or otherwise learns of any metering, telemetry or communications equipment errors or malfunctions that require the attention and/or correction by another Party. The Party owning such equipment shall correct such error or malfunction as soon as reasonably feasible.

8.3 No Annexation. Any and all equipment placed on the premises of a Party shall be and remain the property of the Party providing such equipment regardless of the mode and manner of annexation or attachment to real property, unless otherwise mutually agreed by the Parties.

ARTICLE 9. OPERATIONS

9.1 General. Each Party shall comply with the Applicable Reliability Council requirements. Each Party shall provide to the other Party all information that may reasonably be required by the other Party to comply with Applicable Laws and Regulations and Applicable Reliability Standards.

9.2 Balancing Authority Area Notification. At least three months before Initial Synchronization Date, the Interconnection Customer shall notify the CAISO and Participating TO in writing of the Balancing Authority Area in which the Large Generating Facility intends to be located. If the Interconnection Customer intends to locate the Large Generating Facility in a Balancing Authority Area other than the Balancing Authority Area within whose electrically metered boundaries the Large Generating Facility is located, and if permitted to do so by the relevant transmission tariffs, all necessary arrangements, including but not limited to those set forth in Article 7 and Article 8 of this LGIA, and remote Balancing Authority Area generator interchange agreements, if applicable, and the appropriate measures under such agreements, shall be executed and implemented prior to the placement of the Large Generating Facility in the other Balancing Authority Area.

9.3 CAISO and Participating TO Obligations. The CAISO and Participating TO shall cause the Participating TO's Transmission System to be operated and controlled in a safe and reliable manner and in accordance with this LGIA. The Participating TO at the Interconnection Customer's expense shall cause the Participating TO's Interconnection Facilities to be operated, maintained and controlled in a safe and reliable manner and in accordance with this LGIA. The CAISO and Participating TO may provide operating instructions to the Interconnection Customer consistent with this LGIA and Participating TO and CAISO operating protocols and procedures as they may change from time to time. The Participating TO and CAISO will consider changes to their operating protocols and procedures proposed by the Interconnection Customer.

9.4 Interconnection Customer Obligations. The Interconnection Customer shall at its own expense operate, maintain and control the Large Generating Facility and the Interconnection Customer's Interconnection Facilities in a safe and reliable manner and in accordance with this LGIA. The Interconnection Customer shall operate the Large Generating Facility and the Interconnection Customer's Interconnection Facilities in accordance with all applicable requirements of the Balancing Authority Area of which it is part, including such requirements as set forth in Appendix C, Interconnection Details, of this LGIA. Appendix C, Interconnection Details, will be modified to reflect changes to the requirements as they may change from time to time. A Party may request that another Party provide copies of the requirements set forth in Appendix C, Interconnection Details, of this LGIA. The Interconnection Customer shall not commence Commercial Operation of an Electric Generating Unit with the Participating TO's Transmission System until the Participating TO provides prior written approval, which approval shall not be unreasonably withheld, for operation of such Electric Generating Unit.

9.5 Start-Up and Synchronization. Consistent with the Parties' mutually acceptable procedures, the Interconnection Customer is responsible for the

proper synchronization of each Electric Generating Unit to the CAISO Controlled Grid.

9.6 Reactive Power.

9.6.1 Power Factor Design Criteria. For all Generating Facilities other than Asynchronous Generating Facilities, the Interconnection Customer shall design the Large Generating Facility to maintain a composite power delivery at continuous rated power output at the terminals of the Electric Generating Unit at a power factor within the range of 0.95 leading to 0.90 lagging, unless the CAISO has established different requirements that apply to all generators in the Balancing Authority Area on a comparable basis. For Asynchronous Generating Facilities, the Interconnection Customer shall design the Large Generating Facility to maintain power factor criteria in accordance with **Appendix H of this LGIA.**

9.6.2 Voltage Schedules. Once the Interconnection Customer has synchronized an Electric Generating Unit with the CAISO Controlled Grid, the CAISO or Participating TO shall require the Interconnection Customer to maintain a voltage schedule by operating the Electric Generating Unit to produce or absorb reactive power within the design limitations of the Electric Generating Unit set forth in Article 9.6.1 (Power Factor Design Criteria). CAISO's voltage schedules shall treat all sources of reactive power in the Balancing Authority Area in an equitable and not unduly discriminatory manner. The Participating TO shall exercise Reasonable Efforts to provide the Interconnection Customer with such schedules at least one (1) day in advance, and the CAISO or Participating TO may make changes to such schedules as necessary to maintain the reliability of the CAISO Controlled Grid or the Participating TO's electric system. The Interconnection Customer shall operate the Electric Generating Unit to maintain the specified output voltage or power factor within the design limitations of the Electric Generating Unit set forth in Article 9.6.1 (Power Factor Design Criteria), and as may be required by the CAISO to operate the Electric Generating Unit at a specific voltage schedule within the design limitations set forth in Article 9.6.1. If the Interconnection Customer is unable to maintain the specified voltage or power factor, it shall promptly notify the CAISO and the Participating TO.

9.6.2.1 Governors and Regulators. Whenever an Electric Generating Unit is operated in parallel with the CAISO Controlled Grid and the speed governors (if installed on the Electric Generating Unit pursuant to Good Utility Practice) and voltage regulators are capable of operation, the Interconnection Customer shall operate the Electric Generating Unit with its speed governors and voltage regulators in automatic operation. If the Electric Generating Unit's speed governors and voltage regulators are not capable of such

automatic operation, the Interconnection Customer shall immediately notify the CAISO and the Participating TO and ensure that the Electric Generating Unit operates as specified in Article 9.6.2 through manual operation and that such Electric Generating Unit's reactive power production or absorption (measured in MVARs) are within the design capability of the Electric Generating Unit(s) and steady state stability limits. The Interconnection Customer shall restore the speed governors and voltage regulators to automatic operation as soon as possible. If the Large Generating Facility's speed governors and voltage regulators are improperly tuned or malfunctioning, the CAISO shall have the right to order the reduction in output or disconnection of the Large Generating Facility if the reliability of the CAISO Controlled Grid would be adversely affected. The Interconnection Customer shall not cause its Large Generating Facility to disconnect automatically or instantaneously from the CAISO Controlled Grid or trip any Electric Generating Unit comprising the Large Generating Facility for an under or over frequency condition unless the abnormal frequency condition persists for a time period beyond the limits set forth in ANSI/IEEE Standard C37.106, or such other standard as applied to other generators in the Balancing Authority Area on a comparable basis.

9.6.3 Payment for Reactive Power. CAISO is required to pay the Interconnection Customer for reactive power that Interconnection Customer provides or absorbs from an Electric Generating Unit when the CAISO requests the Interconnection Customer to operate its Electric Generating Unit outside the range specified in Article 9.6.1, provided that if the CAISO pays other generators for reactive power service within the specified range, it must also pay the Interconnection Customer. Payments shall be pursuant to Article 11.6 or such other agreement to which the CAISO and Interconnection Customer have otherwise agreed.

9.7 Outages and Interruptions.

9.7.1 Outages.

9.7.1.1 Outage Authority and Coordination. Each Party may in accordance with Good Utility Practice in coordination with the other Parties remove from service any of its respective Interconnection Facilities or Network Upgrades that may impact another Party's facilities as necessary to perform maintenance or testing or to install or replace equipment. Absent an Emergency Condition, the Party scheduling a removal of such facility(ies) from service will use Reasonable Efforts to schedule such removal on a date and time mutually acceptable to all Parties. In all circumstances any Party

planning to remove such facility(ies) from service shall use Reasonable Efforts to minimize the effect on the other Parties of such removal.

9.7.1.2 Outage Schedules. The CAISO shall post scheduled outages of CAISO Controlled Grid facilities in accordance with the provisions of the CAISO Tariff. The Interconnection Customer shall submit its planned maintenance schedules for the Large Generating Facility to the CAISO in accordance with the CAISO Tariff. The Interconnection Customer shall update its planned maintenance schedules in accordance with the CAISO Tariff. The CAISO may request the Interconnection Customer to reschedule its maintenance as necessary to maintain the reliability of the CAISO Controlled Grid in accordance with the CAISO Tariff. Such planned maintenance schedules and updates and changes to such schedules shall be provided by the Interconnection Customer to the Participating TO concurrently with their submittal to the CAISO. The CAISO shall compensate the Interconnection Customer for any additional direct costs that the Interconnection Customer incurs as a result of having to reschedule maintenance in accordance with the CAISO Tariff. The Interconnection Customer will not be eligible to receive compensation, if during the twelve (12) months prior to the date of the scheduled maintenance, the Interconnection Customer had modified its schedule of maintenance activities.

9.7.1.3 Outage Restoration. If an outage on a Party's Interconnection Facilities or Network Upgrades adversely affects another Party's operations or facilities, the Party that owns or controls the facility that is out of service shall use Reasonable Efforts to promptly restore such facility(ies) to a normal operating condition consistent with the nature of the outage. The Party that owns or controls the facility that is out of service shall provide the other Parties, to the extent such information is known, information on the nature of the Emergency Condition, if the outage is caused by an Emergency Condition, an estimated time of restoration, and any corrective actions required. Initial verbal notice shall be followed up as soon as practicable with written notice explaining the nature of the outage, if requested by a Party, which may be provided by e-mail or facsimile.

9.7.2 Interruption of Service. If required by Good Utility Practice to do so, the CAISO or the Participating TO may require the Interconnection Customer to interrupt or reduce deliveries of electricity if such delivery of electricity could adversely affect the CAISO's or the Participating TO's ability to perform such activities as are necessary to safely and reliably operate and maintain the Participating TO's electric system or the CAISO Controlled

Grid. The following provisions shall apply to any interruption or reduction permitted under this Article 9.7.2:

9.7.2.1 The interruption or reduction shall continue only for so long as reasonably necessary under Good Utility Practice;

9.7.2.2 Any such interruption or reduction shall be made on an equitable, non-discriminatory basis with respect to all generating facilities directly connected to the CAISO Controlled Grid, subject to any conditions specified in this LGIA;

9.7.2.3 When the interruption or reduction must be made under circumstances which do not allow for advance notice, the CAISO or Participating TO, as applicable, shall notify the Interconnection Customer by telephone as soon as practicable of the reasons for the curtailment, interruption, or reduction, and, if known, its expected duration. Telephone notification shall be followed by written notification, if requested by the Interconnection Customer, as soon as practicable;

9.7.2.4 Except during the existence of an Emergency Condition, the CAISO or Participating TO shall notify the Interconnection Customer in advance regarding the timing of such interruption or reduction and further notify the Interconnection Customer of the expected duration. The CAISO or Participating TO shall coordinate with the Interconnection Customer using Good Utility Practice to schedule the interruption or reduction during periods of least impact to the Interconnection Customer, the CAISO, and the Participating TO;

9.7.2.5 The Parties shall cooperate and coordinate with each other to the extent necessary in order to restore the Large Generating Facility, Interconnection Facilities, the Participating TO's Transmission System, and the CAISO Controlled Grid to their normal operating state, consistent with system conditions and Good Utility Practice.

9.7.3 Under-Frequency and Over Frequency Conditions. The CAISO Controlled Grid is designed to automatically activate a load-shed program as required by the Applicable Reliability Council in the event of an under-frequency system disturbance. The Interconnection Customer shall implement under-frequency and over-frequency protection set points for the Large Generating Facility as required by the Applicable Reliability Council to ensure "ride through" capability. Large Generating Facility response to frequency deviations of pre-determined magnitudes, both under-frequency and over-frequency deviations, shall be studied and

coordinated with the Participating TO and CAISO in accordance with Good Utility Practice. The term "ride through" as used herein shall mean the ability of a Generating Facility to stay connected to and synchronized with the CAISO Controlled Grid during system disturbances within a range of under-frequency and over-frequency conditions, in accordance with Good Utility Practice. Asynchronous Generating Facilities shall be subject to frequency ride through capability requirements in accordance with Appendix H to this LGIA.

9.7.4 System Protection and Other Control Requirements.

9.7.4.1 System Protection Facilities. The Interconnection Customer shall, at its expense, install, operate and maintain System Protection Facilities as a part of the Large Generating Facility or the Interconnection Customer's Interconnection Facilities. The Participating TO shall install at the Interconnection Customer's expense any System Protection Facilities that may be required on the Participating TO's Interconnection Facilities or the Participating TO's Transmission System as a result of the interconnection of the Large Generating Facility and the Interconnection Customer's Interconnection Facilities.

9.7.4.2 The Participating TO's and Interconnection Customer's protection facilities shall be designed and coordinated with other systems in accordance with Applicable Reliability Council criteria and Good Utility Practice.

9.7.4.3 The Participating TO and Interconnection Customer shall each be responsible for protection of its facilities consistent with Good Utility Practice.

9.7.4.4 The Participating TO's and Interconnection Customer's protective relay design shall incorporate the necessary test switches to perform the tests required in Article 6. The required test switches will be placed such that they allow operation of lockout relays while preventing breaker failure schemes from operating and causing unnecessary breaker operations and/or the tripping of the Interconnection Customer's Electric Generating Units.

9.7.4.5 The Participating TO and Interconnection Customer will test, operate and maintain System Protection Facilities in accordance with Good Utility Practice and, if applicable, the requirements of the Participating TO's Interconnection Handbook.

9.7.4.6 Prior to the in-service date, and again prior to the Commercial

Operation Date, the Participating TO and Interconnection Customer or their agents shall perform a complete calibration test and functional trip test of the System Protection Facilities. At intervals suggested by Good Utility Practice, the standards and procedures of the Participating TO, including, if applicable, the requirements of the Participating TO's Interconnection Handbook, and following any apparent malfunction of the System Protection Facilities, each Party shall perform both calibration and functional trip tests of its System Protection Facilities. These tests do not require the tripping of any in-service generation unit. These tests do, however, require that all protective relays and lockout contacts be activated.

9.7.5 Requirements for Protection. In compliance with Good Utility Practice and, if applicable, the requirements of the Participating TO's Interconnection Handbook, the Interconnection Customer shall provide, install, own, and maintain relays, circuit breakers and all other devices necessary to remove any fault contribution of the Large Generating Facility to any short circuit occurring on the Participating TO's Transmission System not otherwise isolated by the Participating TO's equipment, such that the removal of the fault contribution shall be coordinated with the protective requirements of the Participating TO's Transmission System. Such protective equipment shall include, without limitation, a disconnecting device with fault current-interrupting capability located between the Large Generating Facility and the Participating TO's Transmission System at a site selected upon mutual agreement (not to be unreasonably withheld, conditioned or delayed) of the Parties. The Interconnection Customer shall be responsible for protection of the Large Generating Facility and the Interconnection Customer's other equipment from such conditions as negative sequence currents, over- or under-frequency, sudden load rejection, over- or under-voltage, and generator loss-of-field. The Interconnection Customer shall be solely responsible to disconnect the Large Generating Facility and the Interconnection Customer's other equipment if conditions on the CAISO Controlled Grid could adversely affect the Large Generating Facility.

9.7.6 Power Quality. Neither the Participating TO's nor the Interconnection Customer's facilities shall cause excessive voltage flicker nor introduce excessive distortion to the sinusoidal voltage or current waves as defined by ANSI Standard C84.1-1989, in accordance with IEEE Standard 519, any applicable superseding electric industry standard, or any alternative Applicable Reliability Council standard. In the event of a conflict between ANSI Standard C84.1-1989, any applicable superseding electric industry standard, or any alternative Applicable Reliability Council standard, the alternative Applicable Reliability Council standard shall control.

9.8 Switching and Tagging Rules. Each Party shall provide the other Parties a

copy of its switching and tagging rules that are applicable to the other Parties' activities. Such switching and tagging rules shall be developed on a non-discriminatory basis. The Parties shall comply with applicable switching and tagging rules, as amended from time to time, in obtaining clearances for work or for switching operations on equipment.

9.9 Use of Interconnection Facilities by Third Parties.

9.9.1 Purpose of Interconnection Facilities. Except as may be required by Applicable Laws and Regulations, or as otherwise agreed to among the Parties, the Interconnection Facilities shall be constructed for the sole purpose of interconnecting the Large Generating Facility to the Participating TO's Transmission System and shall be used for no other purpose.

9.9.2 Third Party Users. If required by Applicable Laws and Regulations or if the Parties mutually agree, such agreement not to be unreasonably withheld, to allow one or more third parties to use the Participating TO's Interconnection Facilities, or any part thereof, the Interconnection Customer will be entitled to compensation for the capital expenses it incurred in connection with the Interconnection Facilities based upon the pro rata use of the Interconnection Facilities by the Participating TO, all third party users, and the Interconnection Customer, in accordance with Applicable Laws and Regulations or upon some other mutually-agreed upon methodology. In addition, cost responsibility for ongoing costs, including operation and maintenance costs associated with the Interconnection Facilities, will be allocated between the Interconnection Customer and any third party users based upon the pro rata use of the Interconnection Facilities by the Participating TO, all third party users, and the Interconnection Customer, in accordance with Applicable Laws and Regulations or upon some other mutually agreed upon methodology. If the issue of such compensation or allocation cannot be resolved through such negotiations, it shall be submitted to FERC for resolution.

9.10 Disturbance Analysis Data Exchange. The Parties will cooperate with one another in the analysis of disturbances to either the Large Generating Facility or the CAISO Controlled Grid by gathering and providing access to any information relating to any disturbance, including information from oscillography, protective relay targets, breaker operations and sequence of events records, and any disturbance information required by Good Utility Practice.

ARTICLE 10. MAINTENANCE

10.1 Participating TO Obligations. The Participating TO shall maintain the Participating TO's Transmission System and the Participating TO's

Interconnection Facilities in a safe and reliable manner and in accordance with this LGIA.

10.2 Interconnection Customer Obligations. The Interconnection Customer shall maintain the Large Generating Facility and the Interconnection Customer's Interconnection Facilities in a safe and reliable manner and in accordance with this LGIA.

10.3 Coordination. The Parties shall confer regularly to coordinate the planning, scheduling and performance of preventive and corrective maintenance on the Large Generating Facility and the Interconnection Facilities.

10.4 Secondary Systems. The Participating TO and Interconnection Customer shall cooperate with the other Parties in the inspection, maintenance, and testing of control or power circuits that operate below 600 volts, AC or DC, including, but not limited to, any hardware, control or protective devices, cables, conductors, electric raceways, secondary equipment panels, transducers, batteries, chargers, and voltage and current transformers that directly affect the operation of a Party's facilities and equipment which may reasonably be expected to impact the other Parties. Each Party shall provide advance notice to the other Parties before undertaking any work on such circuits, especially on electrical circuits involving circuit breaker trip and close contacts, current transformers, or potential transformers.

10.5 Operating and Maintenance Expenses. Subject to the provisions herein addressing the use of facilities by others, and except for operations and maintenance expenses associated with modifications made for providing interconnection or transmission service to a third party and such third party pays for such expenses, the Interconnection Customer shall be responsible for all reasonable expenses including overheads, associated with: (1) owning, operating, maintaining, repairing, and replacing the Interconnection Customer's Interconnection Facilities; and (2) operation, maintenance, repair and replacement of the Participating TO's Interconnection Facilities.

ARTICLE 11. PERFORMANCE OBLIGATION

11.1 Interconnection Customer's Interconnection Facilities. The Interconnection Customer shall design, procure, construct, install, own and/or control the Interconnection Customer's Interconnection Facilities described in Appendix A at its sole expense.

11.2 Participating TO's Interconnection Facilities. The Participating TO shall design, procure, construct, install, own and/or control the Participating TO's Interconnection Facilities described in Appendix A at the sole expense of the Interconnection Customer. Unless the Participating TO elects to fund the capital for the Participating TO's Interconnection Facilities, they shall be solely funded by

the Interconnection Customer.

11.3 Network Upgrades and Distribution Upgrades. The Participating TO shall design, procure, construct, install, and own the Network Upgrades and Distribution Upgrades described in Appendix A. The Interconnection Customer shall be responsible for all costs related to Distribution Upgrades. Unless the Participating TO elects to fund the capital for the Distribution Upgrades and Network Upgrades, they shall be solely funded by the Interconnection Customer.

11.4 Transmission Credits. No later than thirty (30) days prior to the Commercial Operation Date, the Interconnection Customer may make a one-time election by written notice to the CAISO and the Participating TO to receive Congestion Revenue Rights as defined in and as available under the CAISO Tariff at the time of the election in accordance with the CAISO Tariff, in lieu of a refund of the cost of Network Upgrades in accordance with Article 11.4.1.

11.4.1 Repayment of Amounts Advanced for Network Upgrades. Upon the Commercial Operation Date, the Interconnection Customer shall be entitled to a repayment, equal to the total amount paid to the Participating TO for the cost of Network Upgrades. Such amount shall include any tax gross-up or other tax-related payments associated with Network Upgrades not refunded to the Interconnection Customer pursuant to Article 5.17.8 or otherwise, and shall be paid to the Interconnection Customer by the Participating TO on a dollar-for-dollar basis either through (1) direct payments made on a levelized basis over the five-year period commencing on the Commercial Operation Date; or (2) any alternative payment schedule that is mutually agreeable to the Interconnection Customer and Participating TO, provided that such amount is paid within five (5) years from the Commercial Operation Date. Notwithstanding the foregoing, if this LGIA terminates within five (5) years from the Commercial Operation Date, the Participating TO's obligation to pay refunds to the Interconnection Customer shall cease as of the date of termination. Any repayment shall include interest calculated in accordance with the methodology set forth in FERC's regulations at 18 C.F.R. §35.19a(a)(2)(iii) from the date of any payment for Network Upgrades through the date on which the Interconnection Customer receives a repayment of such payment. Interest shall continue to accrue on the repayment obligation so long as this LGIA is in effect. The Interconnection Customer may assign such repayment rights to any person.

If the Large Generating Facility fails to achieve commercial operation, but it or another Generating Facility is later constructed and makes use of the Network Upgrades, the Participating TO shall at that time reimburse Interconnection Customer for the amounts advanced for the Network Upgrades. Before any such reimbursement can occur, the

Interconnection Customer, or the entity that ultimately constructs the Generating Facility, if different, is responsible for identifying the entity to which reimbursement must be made.

11.4.2 Special Provisions for Affected Systems. The Interconnection Customer shall enter into an agreement with the owner of the Affected System and/or other affected owners of portions of the CAISO Controlled Grid, as applicable, in accordance with the LGIP. Such agreement shall specify the terms governing payments to be made by the Interconnection Customer to the owner of the Affected System and/or other affected owners of portions of the CAISO Controlled Grid as well as the repayment by the owner of the Affected System and/or other affected owners of portions of the CAISO Controlled Grid. In no event shall the Participating TO be responsible for the repayment for any facilities that are not part of the Participating TO's Transmission System.

11.4.3 Notwithstanding any other provision of this LGIA, nothing herein shall be construed as relinquishing or foreclosing any rights, including but not limited to firm transmission rights, capacity rights, Congestion Revenue Rights, or transmission credits, that the Interconnection Customer shall be entitled to, now or in the future under any other agreement or tariff as a result of, or otherwise associated with, the transmission capacity, if any, created by the Network Upgrades, including the right to obtain cash reimbursements or transmission credits for transmission service that is not associated with the Large Generating Facility.

11.5 Provision of Security. At least thirty (30) Calendar Days prior to the commencement of the procurement, installation, or construction of a discrete portion of a Participating TO's Interconnection Facilities, Network Upgrades, or Distribution Upgrades, the Interconnection Customer shall provide the Participating TO, at the Interconnection Customer's option, a guarantee, a surety bond, letter of credit or other form of security that is reasonably acceptable to the Participating TO and is consistent with the Uniform Commercial Code of the jurisdiction identified in Article 14.2.1. Such security for payment shall be in an amount sufficient to cover the costs for constructing, procuring and installing the applicable portion of the Participating TO's Interconnection Facilities, Network Upgrades, or Distribution Upgrades. Such security shall be reduced on a dollar-for-dollar basis for payments made to the Participating TO for these purposes.

In addition:

11.5.1 The guarantee must be made by an entity that meets the creditworthiness requirements of the Participating TO, and contain terms and conditions that guarantee payment of any amount that may be due from the Interconnection Customer, up to an agreed-to maximum amount.

11.5.2 The letter of credit must be issued by a financial institution reasonably acceptable to the Participating TO and must specify a reasonable expiration date.

11.5.3 The surety bond must be issued by an insurer reasonably acceptable to the Participating TO and must specify a reasonable expiration date.

11.6 Interconnection Customer Compensation. If the CAISO requests or directs the Interconnection Customer to provide a service pursuant to Articles 9.6.3 (Payment for Reactive Power) or 13.5.1 of this LGIA, the CAISO shall compensate the Interconnection Customer in accordance with the CAISO Tariff.

11.6.1 Interconnection Customer Compensation for Actions During Emergency Condition. The CAISO shall compensate the Interconnection Customer in accordance with the CAISO Tariff for its provision of real and reactive power and other Emergency Condition services that the Interconnection Customer provides to support the CAISO Controlled Grid during an Emergency Condition in accordance with Article 11.6.

ARTICLE 12. INVOICE

12.1 General. The Participating TO shall submit to the Interconnection Customer, on a monthly basis, invoices of amounts due pursuant to this LGIA for the preceding month. Each invoice shall state the month to which the invoice applies and fully describe the services and equipment provided. The Parties may discharge mutual debts and payment obligations due and owing to each other on the same date through netting, in which case all amounts a Party owes to the other Party under this LGIA, including interest payments or credits, shall be netted so that only the net amount remaining due shall be paid by the owing Party. Notwithstanding the foregoing, any invoices between the CAISO and another Party shall be submitted and paid in accordance with the CAISO Tariff.

12.2 Final Invoice. As soon as reasonably practicable, but within twelve months after completion of the construction of the Participating TO's Interconnection Facilities, Network Upgrades, and Distribution Upgrades, the Participating TO shall provide an invoice of the final cost of the construction of the Participating TO's Interconnection Facilities, Network Upgrades, and Distribution Upgrades, and shall set forth such costs in sufficient detail to enable the Interconnection Customer to compare the actual costs with the estimates and to ascertain deviations, if any, from the cost estimates. The Participating TO shall refund to the Interconnection Customer any amount by which the actual payment by the Interconnection Customer for estimated costs exceeds the actual costs of construction within thirty (30) Calendar Days of the issuance of such final construction invoice; or, in the event the actual costs of construction exceed the

Interconnection Customer's actual payment for estimated costs, then the Interconnection Customer shall pay to the Participating TO any amount by which the actual costs of construction exceed the actual payment by the Interconnection Customer for estimated costs within thirty (30) Calendar Days of the issuance of such final construction invoice.

12.3 Payment. Invoices shall be rendered to the Interconnection Customer at the address specified in Appendix F. The Interconnection Customer shall pay, or Participating TO shall refund, the amounts due within thirty (30) Calendar Days of the Interconnection Customer's receipt of the invoice. All payments shall be made in immediately available funds payable to the Interconnection Customer or Participating TO, or by wire transfer to a bank named and account designated by the invoicing Interconnection Customer or Participating TO. Payment of invoices by any Party will not constitute a waiver of any rights or claims any Party may have under this LGIA.

12.4 Disputes. In the event of a billing dispute between the Interconnection Customer and the Participating TO, the Participating TO and the CAISO shall continue to provide Interconnection Service under this LGIA as long as the Interconnection Customer: (i) continues to make all payments not in dispute; and (ii) pays to the Participating TO or into an independent escrow account the portion of the invoice in dispute, pending resolution of such dispute. If the Interconnection Customer fails to meet these two requirements for continuation of service, then the Participating TO may provide notice to the Interconnection Customer of a Default pursuant to Article 17. Within thirty (30) Calendar Days after the resolution of the dispute, the Party that owes money to the other Party shall pay the amount due with interest calculated in accordance with the methodology set forth in FERC's Regulations at 18 C.F.R. § 35.19a(a)(2)(iii). Notwithstanding the foregoing, any billing dispute between the CAISO and another Party shall be resolved in accordance with the provisions of Article 27 of this LGIA.

ARTICLE 13. EMERGENCIES

13.1 [Reserved]

13.2 Obligations. Each Party shall comply with the Emergency Condition procedures of the CAISO, NERC, the Applicable Reliability Council, Applicable Laws and Regulations, and any emergency procedures set forth in this LGIA.

13.3 Notice. The Participating TO or the CAISO shall notify the Interconnection Customer promptly when it becomes aware of an Emergency Condition that affects the Participating TO's Interconnection Facilities or Distribution System or the CAISO Controlled Grid, respectively, that may reasonably be expected to affect the Interconnection Customer's operation of the Large Generating Facility

or the Interconnection Customer's Interconnection Facilities. The Interconnection Customer shall notify the Participating TO and the CAISO promptly when it becomes aware of an Emergency Condition that affects the Large Generating Facility or the Interconnection Customer's Interconnection Facilities that may reasonably be expected to affect the CAISO Controlled Grid or the Participating TO's Interconnection Facilities. To the extent information is known, the notification shall describe the Emergency Condition, the extent of the damage or deficiency, the expected effect on the operation of the Interconnection Customer's or Participating TO's facilities and operations, its anticipated duration and the corrective action taken and/or to be taken. The initial notice shall be followed as soon as practicable with written notice, if requested by a Party, which may be provided by electronic mail or facsimile, or in the case of the CAISO may be publicly posted on the CAISO's internet web site.

13.4 Immediate Action. Unless, in the Interconnection Customer's reasonable judgment, immediate action is required, the Interconnection Customer shall obtain the consent of the CAISO and the Participating TO, such consent to not be unreasonably withheld, prior to performing any manual switching operations at the Large Generating Facility or the Interconnection Customer's Interconnection Facilities in response to an Emergency Condition declared by the Participating TO or CAISO or in response to any other emergency condition.

13.5 CAISO and Participating TO Authority.

13.5.1 General. The CAISO and Participating TO may take whatever actions or inactions, including issuance of dispatch instructions, with regard to the CAISO Controlled Grid or the Participating TO's Interconnection Facilities or Distribution System they deem necessary during an Emergency Condition in order to (i) preserve public health and safety, (ii) preserve the reliability of the CAISO Controlled Grid or the Participating TO's Interconnection Facilities or Distribution System, and (iii) limit or prevent damage, and (iv) expedite restoration of service.

The Participating TO and the CAISO shall use Reasonable Efforts to minimize the effect of such actions or inactions on the Large Generating Facility or the Interconnection Customer's Interconnection Facilities. The Participating TO or the CAISO may, on the basis of technical considerations, require the Large Generating Facility to mitigate an Emergency Condition by taking actions necessary and limited in scope to remedy the Emergency Condition, including, but not limited to, directing the Interconnection Customer to shut-down, start-up, increase or decrease the real or reactive power output of the Large Generating Facility; implementing a reduction or disconnection pursuant to Article 13.5.2; directing the Interconnection Customer to assist with black start (if available) or restoration efforts; or altering the outage schedules of the Large Generating Facility and the Interconnection Customer's

Interconnection Facilities. Interconnection Customer shall comply with all of the CAISO's and Participating TO's operating instructions concerning Large Generating Facility real power and reactive power output within the manufacturer's design limitations of the Large Generating Facility's equipment that is in service and physically available for operation at the time, in compliance with Applicable Laws and Regulations.

13.5.2 Reduction and Disconnection. The Participating TO or the CAISO may reduce Interconnection Service or disconnect the Large Generating Facility or the Interconnection Customer's Interconnection Facilities when such reduction or disconnection is necessary under Good Utility Practice due to Emergency Conditions. These rights are separate and distinct from any right of curtailment of the CAISO pursuant to the CAISO Tariff. When the CAISO or Participating TO can schedule the reduction or disconnection in advance, the CAISO or Participating TO shall notify the Interconnection Customer of the reasons, timing and expected duration of the reduction or disconnection. The CAISO or Participating TO shall coordinate with the Interconnection Customer using Good Utility Practice to schedule the reduction or disconnection during periods of least impact to the Interconnection Customer and the CAISO and Participating TO. Any reduction or disconnection shall continue only for so long as reasonably necessary under Good Utility Practice. The Parties shall cooperate with each other to restore the Large Generating Facility, the Interconnection Facilities, and the CAISO Controlled Grid to their normal operating state as soon as practicable consistent with Good Utility Practice.

13.6 Interconnection Customer Authority. Consistent with Good Utility Practice, this LGIA, and the CAISO Tariff, the Interconnection Customer may take actions or inactions with regard to the Large Generating Facility or the Interconnection Customer's Interconnection Facilities during an Emergency Condition in order to (i) preserve public health and safety, (ii) preserve the reliability of the Large Generating Facility or the Interconnection Customer's Interconnection Facilities, (iii) limit or prevent damage, and (iv) expedite restoration of service. Interconnection Customer shall use Reasonable Efforts to minimize the effect of such actions or inactions on the CAISO Controlled Grid and the Participating TO's Interconnection Facilities. The CAISO and Participating TO shall use Reasonable Efforts to assist Interconnection Customer in such actions.

13.7 Limited Liability. Except as otherwise provided in Article 11.6.1 of this LGIA, no Party shall be liable to any other Party for any action it takes in responding to an Emergency Condition so long as such action is made in good faith and is consistent with Good Utility Practice.

ARTICLE 14. REGULATORY REQUIREMENTS AND GOVERNING LAW

14.1 Regulatory Requirements. Each Party's obligations under this LGIA shall be subject to its receipt of any required approval or certificate from one or more Governmental Authorities in the form and substance satisfactory to the applying Party, or the Party making any required filings with, or providing notice to, such Governmental Authorities, and the expiration of any time period associated therewith. Each Party shall in good faith seek and use its Reasonable Efforts to obtain such other approvals. Nothing in this LGIA shall require the Interconnection Customer to take any action that could result in its inability to obtain, or its loss of, status or exemption under the Federal Power Act or the Public Utility Holding Company Act of 1935, as amended, or the Public Utility Regulatory Policies Act of 1978, or the Energy Policy Act of 2005.

14.2 Governing Law.

14.2.1 The validity, interpretation and performance of this LGIA and each of its provisions shall be governed by the laws of the state where the Point of Interconnection is located, without regard to its conflicts of law principles.

14.2.2 This LGIA is subject to all Applicable Laws and Regulations.

14.2.3 Each Party expressly reserves the right to seek changes in, appeal, or otherwise contest any laws, orders, rules, or regulations of a Governmental Authority.

ARTICLE 15. NOTICES

15.1 General. Unless otherwise provided in this LGIA, any notice, demand or request required or permitted to be given by a Party to another and any instrument required or permitted to be tendered or delivered by a Party in writing to another shall be effective when delivered and may be so given, tendered or delivered, by recognized national courier, or by depositing the same with the United States Postal Service with postage prepaid, for delivery by certified or registered mail, addressed to the Party, or personally delivered to the Party, at the address set out in Appendix F, Addresses for Delivery of Notices and Billings.

A Party must update the information in Appendix F as information changes. A Party may change the notice information in this LGIA by giving five (5) Business Days written notice prior to the effective date of the change. Such changes shall not constitute an amendment to this LGIA.

15.2 Billings and Payments. Billings and payments shall be sent to the addresses set out in Appendix F.

15.3 Alternative Forms of Notice. Any notice or request required or permitted to be

given by a Party to another and not required by this LGIA to be given in writing may be so given by telephone, facsimile or e-mail to the telephone numbers and e-mail addresses set out in Appendix F.

15.4 Operations and Maintenance Notice. Each Party shall notify the other Parties in writing of the identity of the person(s) that it designates as the point(s) of contact with respect to the implementation of Articles 9 and 10.

ARTICLE 16. FORCE MAJEURE

16.1 Force Majeure.

16.1.1 Economic hardship is not considered a Force Majeure event.

16.1.2 No Party shall be considered to be in Default with respect to any obligation hereunder, (including obligations under Article 4), other than the obligation to pay money when due, if prevented from fulfilling such obligation by Force Majeure. A Party unable to fulfill any obligation hereunder (other than an obligation to pay money when due) by reason of Force Majeure shall give notice and the full particulars of such Force Majeure to the other Party in writing or by telephone as soon as reasonably possible after the occurrence of the cause relied upon. Telephone notices given pursuant to this Article shall be confirmed in writing as soon as reasonably possible and shall specifically state full particulars of the Force Majeure, the time and date when the Force Majeure occurred and when the Force Majeure is reasonably expected to cease. The Party affected shall exercise due diligence to remove such disability with reasonable dispatch, but shall not be required to accede or agree to any provision not satisfactory to it in order to settle and terminate a strike or other labor disturbance.

ARTICLE 17. DEFAULT

17.1 Default

17.1.1 General. No Default shall exist where such failure to discharge an obligation (other than the payment of money) is the result of Force Majeure as defined in this LGIA or the result of an act or omission of the other Party. Upon a Breach, the affected non-Breaching Party(ies) shall give written notice of such Breach to the Breaching Party. Except as provided in Article 17.1.2, the Breaching Party shall have thirty (30) Calendar Days from receipt of the Default notice within which to cure such Breach; provided however, if such Breach is not capable of cure within thirty (30) Calendar Days, the Breaching Party shall commence such cure within thirty (30) Calendar Days after notice and continuously and diligently complete such cure within ninety (90) Calendar Days from

receipt of the Default notice; and, if cured within such time, the Breach specified in such notice shall cease to exist.

17.1.2 Right to Terminate. If a Breach is not cured as provided in this Article, or if a Breach is not capable of being cured within the period provided for herein, the affected non-Breaching Party(ies) shall have the right to declare a Default and terminate this LGIA by written notice at any time until cure occurs, and be relieved of any further obligation hereunder and, whether or not such Party(ies) terminates this LGIA, to recover from the Breaching Party all amounts due hereunder, plus all other damages and remedies to which it is entitled at law or in equity. The provisions of this Article will survive termination of this LGIA.

ARTICLE 18. INDEMNITY, CONSEQUENTIAL DAMAGES AND INSURANCE

18.1 Indemnity. Each Party shall at all times indemnify, defend, and hold the other Parties harmless from, any and all Losses arising out of or resulting from another Party's action or inactions of its obligations under this LGIA on behalf of the indemnifying Party, except in cases of gross negligence or intentional wrongdoing by the Indemnified Party.

18.1.1 Indemnified Party. If an Indemnified Party is entitled to indemnification under this Article 18 as a result of a claim by a third party, and the Indemnifying Party fails, after notice and reasonable opportunity to proceed under Article 18.1, to assume the defense of such claim, such Indemnified Party may at the expense of the Indemnifying Party contest, settle or consent to the entry of any judgment with respect to, or pay in full, such claim.

18.1.2 Indemnifying Party. If an Indemnifying Party is obligated to indemnify and hold any Indemnified Party harmless under this Article 18, the amount owing to the Indemnified Party shall be the amount of such Indemnified Party’s actual Loss, net of any insurance or other recovery.

18.1.3 Indemnity Procedures. Promptly after receipt by an Indemnified Party of any claim or notice of the commencement of any action or administrative or legal proceeding or investigation as to which the indemnity provided for in Article 18.1 may apply, the Indemnified Party shall notify the Indemnifying Party of such fact. Any failure of or delay in such notification shall not affect a Party's indemnification obligation unless such failure or delay is materially prejudicial to the indemnifying Party.

The Indemnifying Party shall have the right to assume the defense thereof with counsel designated by such Indemnifying Party and reasonably satisfactory to the Indemnified Party. If the defendants in any such action

include one or more Indemnified Parties and the Indemnifying Party and if the Indemnified Party reasonably concludes that there may be legal defenses available to it and/or other Indemnified Parties which are different from or additional to those available to the Indemnifying Party, the Indemnified Party shall have the right to select separate counsel to assert such legal defenses and to otherwise participate in the defense of such action on its own behalf. In such instances, the Indemnifying Party shall only be required to pay the fees and expenses of one additional attorney to represent an Indemnified Party or Indemnified Parties having such differing or additional legal defenses.

The Indemnified Party shall be entitled, at its expense, to participate in any such action, suit or proceeding, the defense of which has been assumed by the Indemnifying Party. Notwithstanding the foregoing, the Indemnifying Party (i) shall not be entitled to assume and control the defense of any such action, suit or proceedings if and to the extent that, in the opinion of the Indemnified Party and its counsel, such action, suit or proceeding involves the potential imposition of criminal liability on the Indemnified Party, or there exists a conflict or adversity of interest between the Indemnified Party and the Indemnifying Party, in such event the Indemnifying Party shall pay the reasonable expenses of the Indemnified Party, and (ii) shall not settle or consent to the entry of any judgment in any action, suit or proceeding without the consent of the Indemnified Party, which shall not be unreasonably withheld, conditioned or delayed.

18.2 Consequential Damages. Other than the liquidated damages heretofore described in Article 5.3, in no event shall any Party be liable under any provision of this LGIA for any losses, damages, costs or expenses for any special, indirect, incidental, consequential, or punitive damages, including but not limited to loss of profit or revenue, loss of the use of equipment, cost of capital, cost of temporary equipment or services, whether based in whole or in part in contract, in tort, including negligence, strict liability, or any other theory of liability; provided, however, that damages for which a Party may be liable to another Party under another agreement will not be considered to be special, indirect, incidental, or consequential damages hereunder.

18.3 Insurance. Each Party shall, at its own expense, maintain in force throughout the period of this LGIA, and until released by the other Parties, the following minimum insurance coverages, with insurers rated no less than A- (with a minimum size rating of VII) by Bests' Insurance Guide and Key Ratings and authorized to do business in the state where the Point of Interconnection is located, except in the case of the CAISO, the State of California:

18.3.1 Employer's Liability and Workers' Compensation Insurance providing statutory benefits in accordance with the laws and regulations of the

state in which the Point of Interconnection is located, except in the case of the CAISO, the State of California.

18.3.2 Commercial General Liability Insurance including premises and operations, personal injury, broad form property damage, broad form blanket contractual liability coverage (including coverage for the contractual indemnification) products and completed operations coverage, coverage for explosion, collapse and underground hazards, independent contractors coverage, coverage for pollution to the extent normally available and punitive damages to the extent normally available and a cross liability endorsement, with minimum limits of One Million Dollars ($1,000,000) per occurrence/One Million Dollars ($1,000,000) aggregate combined single limit for personal injury, bodily injury, including death and property damage.

18.3.3 Business Automobile Liability Insurance for coverage of owned and non-owned and hired vehicles, trailers or semi-trailers designed for travel on public roads, with a minimum, combined single limit of One Million Dollars ($1,000,000) per occurrence for bodily injury, including death, and property damage.

18.3.4 Excess Public Liability Insurance over and above the Employer's Liability Commercial General Liability and Business Automobile Liability Insurance coverage, with a minimum combined single limit of Twenty Million Dollars ($20,000,000) per occurrence/Twenty Million Dollars ($20,000,000) aggregate.

18.3.5 The Commercial General Liability Insurance, Business Automobile Insurance and Excess Public Liability Insurance policies shall name the other Parties, their parents, associated and Affiliate companies and their respective directors, officers, agents, servants and employees ("Other Party Group") as additional insured. All policies shall contain provisions whereby the insurers waive all rights of subrogation in accordance with the provisions of this LGIA against the Other Party Group and provide thirty (30) Calendar Days advance written notice to the Other Party Group prior to anniversary date of cancellation or any material change in coverage or condition.

18.3.6 The Commercial General Liability Insurance, Business Automobile Liability Insurance and Excess Public Liability Insurance policies shall contain provisions that specify that the policies are primary and shall apply to such extent without consideration for other policies separately carried and shall state that each insured is provided coverage as though a separate policy had been issued to each, except the insurer’s liability shall not be increased beyond the amount for which the insurer would have been liable had only one insured been covered. Each Party shall

be responsible for its respective deductibles or retentions.

18.3.7 The Commercial General Liability Insurance, Business Automobile Liability Insurance and Excess Public Liability Insurance policies, if written on a Claims First Made Basis, shall be maintained in full force and effect for two (2) years after termination of this LGIA, which coverage may be in the form of tail coverage or extended reporting period coverage if agreed by the Parties.

18.3.8 The requirements contained herein as to the types and limits of all insurance to be maintained by the Parties are not intended to and shall not in any manner, limit or qualify the liabilities and obligations assumed by the Parties under this LGIA.

18.3.9 Within ten (10) Calendar Days following execution of this LGIA, and as soon as practicable after the end of each fiscal year or at the renewal of the insurance policy and in any event within ninety (90) Calendar Days thereafter, each Party shall provide certification of all insurance required in this LGIA, executed by each insurer or by an authorized representative of each insurer.

18.3.10 Notwithstanding the foregoing, each Party may self-insure to meet the minimum insurance requirements of Articles 18.3.2 through 18.3.8 to the extent it maintains a self-insurance program; provided that, such Party's senior unsecured debt or issuer rating is BBB-, or better, as rated by Standard & Poor's and that its self-insurance program meets the minimum insurance requirements of Articles 18.3.2 through 18.3.8. For any period of time that a Party's senior unsecured debt rating and issuer rating are both unrated by Standard & Poor's or are both rated at less than BBB- by Standard & Poor's, such Party shall comply with the insurance requirements applicable to it under Articles 18.3.2 through 18.3.9. In the event that a Party is permitted to self-insure pursuant to this Article 18.3.10, it shall notify the other Parties that it meets the requirements to self-insure and that its self-insurance program meets the minimum insurance requirements in a manner consistent with that specified in Article 18.3.9.

18.3.11 The Parties agree to report to each other in writing as soon as practical all accidents or occurrences resulting in injuries to any person, including death, and any property damage arising out of this LGIA.

ARTICLE 19. ASSIGNMENT

19.1 Assignment. This LGIA may be assigned by a Party only with the written consent of the other Parties; provided that a Party may assign this LGIA without

the consent of the other Parties to any Affiliate of the assigning Party with an equal or greater credit rating and with the legal authority and operational ability to satisfy the obligations of the assigning Party under this LGIA; and provided further that the Interconnection Customer shall have the right to assign this LGIA, without the consent of the CAISO or Participating TO, for collateral security purposes to aid in providing financing for the Large Generating Facility, provided that the Interconnection Customer will promptly notify the CAISO and Participating TO of any such assignment. Any financing arrangement entered into by the Interconnection Customer pursuant to this Article will provide that prior to or upon the exercise of the secured party's, trustee's or mortgagee's assignment rights pursuant to said arrangement, the secured creditor, the trustee or mortgagee will notify the CAISO and Participating TO of the date and particulars of any such exercise of assignment right(s), including providing the CAISO and Participating TO with proof that it meets the requirements of Articles 11.5 and 18.3. Any attempted assignment that violates this Article is void and ineffective. Any assignment under this LGIA shall not relieve a Party of its obligations, nor shall a Party's obligations be enlarged, in whole or in part, by reason thereof. Where required, consent to assignment will not be unreasonably withheld, conditioned or delayed.

ARTICLE 20. SEVERABILITY

20.1 Severability. If any provision in this LGIA is finally determined to be invalid, void or unenforceable by any court or other Governmental Authority having jurisdiction, such determination shall not invalidate, void or make unenforceable any other provision, agreement or covenant of this LGIA; provided that if the Interconnection Customer (or any third party, but only if such third party is not acting at the direction of the Participating TO or CAISO) seeks and obtains such a final determination with respect to any provision of the Alternate Option (Article 5.1.2), or the Negotiated Option (Article 5.1.4), then none of the provisions of Article 5.1.2 or 5.1.4 shall thereafter have any force or effect and the Parties' rights and obligations shall be governed solely by the Standard Option (Article 5.1.1).

ARTICLE 21. COMPARABILITY

21.1 Comparability. The Parties will comply with all applicable comparability and code of conduct laws, rules and regulations, as amended from time to time.

ARTICLE 22. CONFIDENTIALITY

22.1 Confidentiality. Confidential Information shall include, without limitation, all information relating to a Party's technology, research and development, business

affairs, and pricing, and any information supplied by any of the Parties to the other Parties prior to the execution of this LGIA.

Information is Confidential Information only if it is clearly designated or marked in writing as confidential on the face of the document, or, if the information is conveyed orally or by inspection, if the Party providing the information orally informs the Parties receiving the information that the information is confidential.

If requested by any Party, the other Parties shall provide in writing, the basis for asserting that the information referred to in this Article 22 warrants confidential treatment, and the requesting Party
may disclose such writing to the appropriate Governmental Authority. Each Party shall be responsible for the costs associated with affording confidential treatment to its information.

22.1.1 Term. During the term of this LGIA, and for a period of three (3) years after the expiration or termination of this LGIA, except as otherwise provided in this Article 22, each Party shall hold in confidence and shall not disclose to any person Confidential Information.

22.1.2 Scope. Confidential Information shall not include information that the receiving Party can demonstrate: (1) is generally available to the public other than as a result of a disclosure by the receiving Party; (2) was in the lawful possession of the receiving Party on a non-confidential basis before receiving it from the disclosing Party; (3) was supplied to the receiving Party without restriction by a third party, who, to the knowledge of the receiving Party after due inquiry, was under no obligation to the disclosing Party to keep such information confidential; (4) was independently developed by the receiving Party without reference to Confidential Information of the disclosing Party; (5) is, or becomes, publicly known, through no wrongful act or omission of the receiving Party or Breach of this LGIA; or (6) is required, in accordance with Article 22.1.7 of this LGIA, Order of Disclosure, to be disclosed by any Governmental Authority or is otherwise required to be disclosed by law or subpoena, or is necessary in any legal proceeding establishing rights and obligations under this LGIA. Information designated as Confidential Information will no longer be deemed confidential if the Party that designated the information as confidential notifies the other Parties that it no longer is confidential.

22.1.3 Release of Confidential Information. No Party shall release or disclose Confidential Information to any other person, except to its employees, consultants, Affiliates (limited by the Standards of Conduct requirements set forth in Part 358 of FERC's Regulations, 18 C.F.R. 358), subcontractors, or to parties who may be or considering providing financing to or equity participation with the Interconnection Customer, or to potential purchasers or assignees of the Interconnection Customer, on a

need-to-know basis in connection with this LGIA, unless such person has first been advised of the confidentiality provisions of this Article 22 and has agreed to comply with such provisions. Notwithstanding the foregoing, a Party providing Confidential Information to any person shall remain primarily responsible for any release of Confidential Information in contravention of this Article 22.

22.1.4 Rights. Each Party retains all rights, title, and interest in the Confidential Information that each Party discloses to the other Parties. The disclosure by each Party to the other Parties of Confidential Information shall not be deemed a waiver by a Party or any other person or entity of the right to protect the Confidential Information from public disclosure.

22.1.5 No Warranties. The mere fact that a Party has provided Confidential Information does not constitute a warranty or representation as to its accuracy or completeness. In addition, by supplying Confidential Information, no Party obligates itself to provide any particular information or Confidential Information to the other Parties nor to enter into any further agreements or proceed with any other relationship or joint venture.

22.1.6 Standard of Care. Each Party shall use at least the same standard of care to protect Confidential Information it receives as it uses to protect its own Confidential Information from unauthorized disclosure, publication or dissemination. Each Party may use Confidential Information solely to fulfill its obligations to the other Parties under this LGIA or its regulatory requirements.

22.1.7 Order of Disclosure. If a court or a Government Authority or entity with the right, power, and apparent authority to do so requests or requires any Party, by subpoena, oral
deposition, interrogatories, requests for production of documents, administrative order, or otherwise, to disclose Confidential Information, that Party shall provide the other Parties with prompt notice of such request(s) or requirement(s) so that the other Parties may seek an appropriate protective order or waive compliance with the terms of this LGIA. Notwithstanding the absence of a protective order or waiver, the Party may disclose such Confidential Information which, in the opinion of its counsel, the Party is legally compelled to disclose. Each Party will use Reasonable Efforts to obtain reliable assurance that confidential treatment will be accorded any Confidential Information so furnished.

22.1.8 Termination of Agreement. Upon termination of this LGIA for any reason, each Party shall, within ten (10) Calendar Days of receipt of a written request from another Party, use Reasonable Efforts to destroy, erase, or delete (with such destruction, erasure, and deletion certified in writing to the other Party) or return to the other Party, without retaining

copies thereof, any and all written or electronic Confidential Information received from the other Party.

22.1.9 Remedies. The Parties agree that monetary damages would be inadequate to compensate a Party for another Party's Breach of its obligations under this Article 22. Each Party accordingly agrees that the other Parties shall be entitled to equitable relief, by way of injunction or otherwise, if the first Party Breaches or threatens to Breach its obligations under this Article 22, which equitable relief shall be granted without bond or proof of damages, and the receiving Party shall not plead in defense that there would be an adequate remedy at law. Such remedy shall not be deemed an exclusive remedy for the Breach of this Article 22, but shall be in addition to all other remedies available at law or in equity. The Parties further acknowledge and agree that the covenants contained herein are necessary for the protection of legitimate business interests and are reasonable in scope. No Party, however, shall be liable for indirect, incidental, or consequential or punitive damages of any nature or kind resulting from or arising in connection with this Article 22.

22.1.10 Disclosure to FERC, its Staff, or a State. Notwithstanding anything in this Article 22 to the contrary, and pursuant to 18 C.F.R. section 1b.20, if FERC or its staff, during the course of an investigation or otherwise, requests information from one of the Parties that is otherwise required to be maintained in confidence pursuant to this LGIA, the Party shall provide the requested information to FERC or its staff, within the time provided for in the request for information. In providing the information to FERC or its staff, the Party must, consistent with 18 C.F.R. section 388.112, request that the information be treated as confidential and non-public by FERC and its staff and that the information be withheld from public disclosure. Parties are prohibited from notifying the other Parties to this LGIA prior to the release of the Confidential Information to FERC or its staff. The Party shall notify the other Parties to the LGIA when it is notified by FERC or its staff that a request to release Confidential Information has been received by FERC, at which time any of the Parties may respond before such information would be made public, pursuant to 18 C.F.R. Section 388.112. Requests from a state regulatory body conducting a confidential investigation shall be treated in a similar manner if consistent with the applicable state rules and regulations.

22.1.11 Subject to the exception in Article 22.1.10, Confidential Information shall not be disclosed by the other Parties to any person not employed or retained by the other Parties, except to the extent disclosure is (i) required by law; (ii) reasonably deemed by the disclosing Party to be required to be disclosed in connection with a dispute between or among the Parties, or the defense of litigation or dispute; (iii) otherwise permitted by consent of the other Parties, such consent not to be unreasonably withheld; or (iv)

necessary to fulfill its obligations under this LGIA or as a transmission service provider or a Balancing Authority including disclosing the Confidential Information to an RTO or ISO or to a regional or national reliability organization. The Party asserting confidentiality shall notify the other Parties in writing of the information it claims is confidential. Prior to any disclosures of another Party's Confidential Information under this subparagraph, or if any third party or Governmental Authority makes any request or demand for any of the information described in this subparagraph, the disclosing Party agrees to promptly notify the other Party in writing and agrees to assert confidentiality and cooperate with the other Party in seeking to protect the Confidential Information from public disclosure by confidentiality agreement, protective order or other reasonable measures.

ARTICLE 23. ENVIRONMENTAL RELEASES

23.1 Each Party shall notify the other Parties, first orally and then in writing, of the release of any Hazardous Substances, any asbestos or lead abatement activities, or any type of remediation activities related to the Large Generating Facility or the Interconnection Facilities, each of which may reasonably be expected to affect the other Parties. The notifying Party shall: (i) provide the notice as soon as practicable, provided such Party makes a good faith effort to provide the notice no later than twenty-four hours after such Party becomes aware of the occurrence; and (ii) promptly furnish to the other Parties copies of any publicly available reports filed with any Governmental Authorities addressing such events.

ARTICLE 24. INFORMATION REQUIREMENTS

24.1 **Information Acquisition**. The Participating TO and the Interconnection Customer shall submit specific information regarding the electrical characteristics of their respective facilities to each other as described below and in accordance with Applicable Reliability Standards.

24.2 **Information Submission by Participating TO**. The initial information submission by the Participating TO shall occur no later than one hundred eighty (180) Calendar Days prior to Trial Operation and shall include the Participating TO's Transmission System information necessary to allow the Interconnection Customer to select equipment and meet any system protection and stability requirements, unless otherwise agreed to by the Participating TO and the Interconnection Customer. On a monthly basis the Participating TO shall provide the Interconnection Customer and the CAISO a status report on the construction and installation of the Participating TO's Interconnection Facilities and Network Upgrades, including, but not limited to, the following information: (1) progress to

date; (2) a description of the activities since the last report; (3) a description of the action items for the next period; and (4) the delivery status of equipment ordered.

24.3 Updated Information Submission by Interconnection Customer. The updated information submission by the Interconnection Customer, including manufacturer information, shall occur no later than one hundred eighty (180) Calendar Days prior to the Trial Operation. The Interconnection Customer shall submit a completed copy of the Electric Generating Unit data requirements contained in Appendix 1 to the LGIP. It shall also include any additional information provided to the Participating TO and the CAISO for the Interconnection Studies. Information in this submission shall be the most current Electric Generating Unit design or expected performance data. Information submitted for stability models shall be compatible with the Participating TO and CAISO standard models. If there is no compatible model, the Interconnection Customer will work with a consultant mutually agreed to by the Parties to develop and supply a standard model and associated information.

If the Interconnection Customer's data is materially different from what was originally provided to the Participating TO and the CAISO for the Interconnection Studies, then the Participating TO and the CAISO will conduct appropriate studies pursuant to the LGIP to determine the impact on the Participating TO's Transmission System and affected portions of the CAISO Controlled Grid based on the actual data submitted pursuant to this Article 24.3. The Interconnection Customer shall not begin Trial Operation until such studies are completed and all other requirements of this LGIA are satisfied.

24.4 Information Supplementation. Prior to the Trial Operation date, the Parties shall supplement their information submissions described above in this Article 24 with any and all "as-built" Electric Generating Unit information or "as-tested" performance information that differs from the initial submissions or, alternatively, written confirmation that no such differences exist. The Interconnection Customer shall conduct tests on the Electric Generating Unit as required by Good Utility Practice such as an open circuit "step voltage" test on the Electric Generating Unit to verify proper operation of the Electric Generating Unit's automatic voltage regulator.

Unless otherwise agreed, the test conditions shall include: (1) Electric Generating Unit at synchronous speed; (2) automatic voltage regulator on and in voltage control mode; and (3) a five percent (5 percent) change in Electric Generating Unit terminal voltage initiated by a change in the voltage regulators reference voltage. The Interconnection Customer shall provide validated test recordings showing the responses of Electric Generating Unit terminal and field voltages. In the event that direct recordings of these voltages is impractical, recordings of other voltages or currents that mirror the response of the Electric Generating Unit's terminal or field voltage are acceptable if information necessary to

translate these alternate quantities to actual Electric Generating Unit terminal or field voltages is provided. Electric Generating Unit testing shall be conducted and results provided to the Participating TO and the CAISO for each individual Electric Generating Unit in a station.

Subsequent to the Commercial Operation Date, the Interconnection Customer shall provide the Participating TO and the CAISO any information changes due to equipment replacement, repair, or adjustment. The Participating TO shall provide the Interconnection Customer any information changes due to equipment replacement, repair or adjustment in the directly connected substation or any adjacent Participating TO-owned substation that may affect the Interconnection Customer's Interconnection Facilities equipment ratings, protection or operating requirements. The Parties shall provide such information pursuant to Article 5.19.

ARTICLE 25. INFORMATION ACCESS AND AUDIT RIGHTS

25.1 Information Access. Each Party (the "disclosing Party") shall make available to the other Party information that is in the possession of the disclosing Party and is necessary in order for the other Party to: (i) verify the costs incurred by the disclosing Party for which the other Party is responsible under this LGIA; and (ii) carry out its obligations and responsibilities under this LGIA. The Parties shall not use such information for purposes other than those set forth in this Article 25.1 and to enforce their rights under this LGIA. Nothing in this Article 25 shall obligate the CAISO to make available to a Party any third party information in its possession or control if making such third party information available would violate a CAISO Tariff restriction on the use or disclosure of such third party information.

25.2 Reporting of Non-Force Majeure Events. Each Party (the "notifying Party") shall notify the other Parties when the notifying Party becomes aware of its inability to comply with the provisions of this LGIA for a reason other than a Force Majeure event. The Parties agree to cooperate with each other and provide necessary information regarding such inability to comply, including the date, duration, reason for the inability to comply, and corrective actions taken or planned to be taken with respect to such inability to comply. Notwithstanding the foregoing, notification, cooperation or information provided under this Article shall not entitle the Party receiving such notification to allege a cause for anticipatory breach of this LGIA.

25.3 Audit Rights. Subject to the requirements of confidentiality under Article 22 of this LGIA, the Parties' audit rights shall include audits of a Party's costs pertaining to such Party's performance or satisfaction of obligations owed to the other Party under this LGIA, calculation of invoiced amounts, the CAISO's efforts to allocate responsibility for the provision of reactive support to the CAISO

Controlled Grid, the CAISO's efforts to allocate responsibility for interruption or reduction of generation on the CAISO Controlled Grid, and each such Party's actions in an Emergency Condition.

25.3.1 The Interconnection Customer and the Participating TO shall each have the right, during normal business hours, and upon prior reasonable notice to the other Party, to audit at its own expense the other Party's accounts and records pertaining to either such Party's performance or either such Party's satisfaction of obligations owed to the other Party under this LGIA. Subject to Article 25.3.2, any audit authorized by this Article shall be performed at the offices where such accounts and records are maintained and shall be limited to those portions of such accounts and records that relate to each such Party's performance and satisfaction of obligations under this LGIA. Each such Party shall keep such accounts and records for a period equivalent to the audit rights periods described in Article 25.4.

25.3.2 Notwithstanding anything to the contrary in Article 25.3, each Party's rights to audit the CAISO's accounts and records shall be as set forth in Section 22.1 of the CAISO Tariff.

25.4 Audit Rights Periods.

25.4.1 Audit Rights Period for Construction-Related Accounts and Records. Accounts and records related to the design, engineering, procurement, and construction of Participating TO's Interconnection Facilities, Network Upgrades, and Distribution Upgrades constructed by the Participating TO shall be subject to audit for a period of twenty-four months following the Participating TO's issuance of a final invoice in accordance with Article 12.2. Accounts and records related to the design, engineering, procurement, and construction of Participating TO's Interconnection Facilities and/or Stand Alone Network Upgrades constructed by the Interconnection Customer shall be subject to audit and verification by the Participating TO and the CAISO for a period of twenty-four months following the Interconnection Customer's issuance of a final invoice in accordance with Article 5.2(8).

25.4.2 Audit Rights Period for All Other Accounts and Records. Accounts and records related to a Party's performance or satisfaction of all obligations under this LGIA other than those described in Article 25.4.1 shall be subject to audit as follows: (i) for an audit relating to cost obligations, the applicable audit rights period shall be twenty-four months after the auditing Party's receipt of an invoice giving rise to such cost obligations; and (ii) for an audit relating to all other obligations, the applicable audit rights period shall be twenty-four months after the event for which the audit is sought; provided that each Party's rights to audit the CAISO's accounts and records shall be as set forth in Section 22.1 of the

CAISO Tariff.

25.5 Audit Results. If an audit by the Interconnection Customer or the Participating TO determines that an overpayment or an underpayment has occurred with respect to the other Party, a notice of such overpayment or underpayment shall be given to the other Party together with those records from the audit which supports such determination. The Party that is owed payment shall render an invoice to the other Party and such invoice shall be paid pursuant to Article 12 hereof.

25.5.1 Notwithstanding anything to the contrary in Article 25.5, the Interconnection Customer's and Participating TO's rights to audit the CAISO's accounts and records shall be as set forth in Section 22.1 of the CAISO Tariff, and the CAISO's process for remedying an overpayment or underpayment shall be as set forth in the CAISO Tariff.

ARTICLE 26. SUBCONTRACTORS

26.1 General. Nothing in this LGIA shall prevent a Party from utilizing the services of any subcontractor as it deems appropriate to perform its obligations under this LGIA; provided, however, that each Party shall require its subcontractors to comply with all applicable terms and conditions of this LGIA in providing such services and each Party shall remain primarily liable to the other Party for the performance of such subcontractor.

26.2 Responsibility of Principal. The creation of any subcontract relationship shall not relieve the hiring Party of any of its obligations under this LGIA. The hiring Party shall be fully responsible to the other Parties for the acts or omissions of any subcontractor the hiring Party hires as if no subcontract had been made; provided, however, that in no event shall the CAISO or Participating TO be liable for the actions or inactions of the Interconnection Customer or its subcontractors with respect to obligations of the Interconnection Customer under Article 5 of this LGIA. Any applicable obligation imposed by this LGIA upon the hiring Party shall be equally binding upon, and shall be construed as having application to, any subcontractor of such Party.

26.3 No Limitation by Insurance. The obligations under this Article 26 will not be limited in any way by any limitation of subcontractor's insurance.

ARTICLE 27. DISPUTES

All disputes arising out of or in connection with this LGIA whereby relief is sought by or from the CAISO shall be settled in accordance with the provisions of Article 13 of the CAISO Tariff, except that references to the CAISO Tariff in such Article 13 of the CAISO

Tariff shall be read as references to this LGIA. Disputes arising out of or in connection with this LGIA not subject to provisions of Article 13 of the CAISO Tariff shall be resolved as follows:

27.1 Submission. In the event either Party has a dispute, or asserts a claim, that arises out of or in connection with this LGIA or its performance, such Party (the "disputing Party") shall provide the other Party with written notice of the dispute or claim ("Notice of Dispute"). Such dispute or claim shall be referred to a designated senior representative of each Party for resolution on an informal basis as promptly as practicable after receipt of the Notice of Dispute by the other Party. In the event the designated representatives are unable to resolve the claim or dispute through unassisted or assisted negotiations within thirty (30) Calendar Days of the other Party's receipt of the Notice of Dispute, such claim or dispute may, upon mutual agreement of the Parties, be submitted to arbitration and resolved in accordance with the arbitration procedures set forth below. In the event the Parties do not agree to submit such claim or dispute to arbitration, each Party may exercise whatever rights and remedies it may have in equity or at law consistent with the terms of this LGIA.

27.2 External Arbitration Procedures. Any arbitration initiated under this LGIA shall be conducted before a single neutral arbitrator appointed by the Parties. If the Parties fail to agree upon a single arbitrator within ten (10) Calendar Days of the submission of the dispute to arbitration, each Party shall choose one arbitrator who shall sit on a three-member arbitration panel. The two arbitrators so chosen shall within twenty (20) Calendar Days select a third arbitrator to chair the arbitration panel. In either case, the arbitrators shall be knowledgeable in electric utility matters, including electric transmission and bulk power issues, and shall not have any current or past substantial business or financial relationships with any party to the arbitration (except prior arbitration). The arbitrator(s) shall provide each of the Parties an opportunity to be heard and, except as otherwise provided herein, shall conduct the arbitration in accordance with the Commercial Arbitration Rules of the American Arbitration Association ("Arbitration Rules") and any applicable FERC regulations; provided, however, in the event of a conflict between the Arbitration Rules and the terms of this Article 27, the terms of this Article 27 shall prevail.

27.3 Arbitration Decisions. Unless otherwise agreed by the Parties, the arbitrator(s) shall render a decision within ninety (90) Calendar Days of appointment and shall notify the Parties in writing of such decision and the reasons therefor. The arbitrator(s) shall be authorized only to interpret and apply the provisions of this LGIA and shall have no power to modify or change any provision of this Agreement in any manner. The decision of the arbitrator(s) shall be final and binding upon the Parties, and judgment on the award may be entered in any court having jurisdiction. The decision of the arbitrator(s) may be appealed solely on the grounds that the conduct of the arbitrator(s), or the decision itself, violated the standards set forth in the Federal Arbitration Act or the Administrative Dispute

Resolution Act. The final decision of the arbitrator must also be filed with FERC if it affects jurisdictional rates, terms and conditions of service, Interconnection Facilities, or Network Upgrades.

27.4 Costs. Each Party shall be responsible for its own costs incurred during the arbitration process and for the following costs, if applicable: (1) the cost of the arbitrator chosen by the Party to sit on the three member panel and one half of the cost of the third arbitrator chosen; or (2) one half the cost of the single arbitrator jointly chosen by the Parties.

ARTICLE 28. REPRESENTATIONS, WARRANTIES AND COVENANTS

28.1 General. Each Party makes the following representations, warranties and covenants:

28.1.1 Good Standing. Such Party is duly organized, validly existing and in good standing under the laws of the state in which it is organized, formed, or incorporated, as applicable; that it is qualified to do business in the state or states in which the Large Generating Facility, Interconnection Facilities and Network Upgrades owned by such Party, as applicable, are located; and that it has the corporate power and authority to own its properties, to carry on its business as now being conducted and to enter into this LGIA and carry out the transactions contemplated hereby and perform and carry out all covenants and obligations on its part to be performed under and pursuant to this LGIA.

28.1.2 Authority. Such Party has the right, power and authority to enter into this LGIA, to become a Party hereto and to perform its obligations hereunder. This LGIA is a legal, valid and binding obligation of such Party, enforceable against such Party in accordance with its terms, except as the enforceability thereof may be limited by applicable bankruptcy, insolvency, reorganization or other similar laws affecting creditors' rights generally and by general equitable principles (regardless of whether enforceability is sought in a proceeding in equity or at law).

28.1.3 No Conflict. The execution, delivery and performance of this LGIA does not violate or conflict with the organizational or formation documents, or bylaws or operating agreement, of such Party, or any judgment, license, permit, order, material agreement or instrument applicable to or binding upon such Party or any of its assets.

28.1.4 Consent and Approval. Such Party has sought or obtained, or, in accordance with this LGIA will seek or obtain, each consent, approval,

authorization, order, or acceptance by any Governmental Authority in connection with the execution, delivery and performance of this LGIA, and it will provide to any Governmental Authority notice of any actions under this LGIA that are required by Applicable Laws and Regulations.

ARTICLE 29. [RESERVED]

ARTICLE 30. MISCELLANEOUS

30.1 Binding Effect. This LGIA and the rights and obligations hereof, shall be binding upon and shall inure to the benefit of the successors and assigns of the Parties hereto.

30.2 Conflicts. In the event of a conflict between the body of this LGIA and any attachment, appendices or exhibits hereto, the terms and provisions of the body of this LGIA shall prevail and be deemed the final intent of the Parties.

30.3 Rules of Interpretation. This LGIA, unless a clear contrary intention appears, shall be construed and interpreted as follows: (1) the singular number includes the plural number and vice versa; (2) reference to any person includes such person's successors and assigns but, in the case of a Party, only if such successors and assigns are permitted by this LGIA, and reference to a person in a particular capacity excludes such person in any other capacity or individually; (3) reference to any agreement (including this LGIA), document, instrument or tariff means such agreement, document, instrument, or tariff as amended or modified and in effect from time to time in accordance with the terms thereof and, if applicable, the terms hereof; (4) reference to any Applicable Laws and Regulations means such Applicable Laws and Regulations as amended, modified, codified, or reenacted, in whole or in part, and in effect from time to time, including, if applicable, rules and regulations promulgated thereunder; (5) unless expressly stated otherwise, reference to any Article, Section or Appendix means such Article of this LGIA or such Appendix to this LGIA, or such Section to the LGIP or such Appendix to the LGIP, as the case may be; (6) "hereunder", "hereof", "herein", "hereto" and words of similar import shall be deemed references to this LGIA as a whole and not to any particular Article or other provision hereof or thereof; (7) "including" (and with correlative meaning "include") means including without limiting the generality of any description preceding such term; and (8) relative to the determination of any period of time, "from" means "from and including", "to" means "to but excluding" and "through" means "through and including".

30.4 Entire Agreement. This LGIA, including all Appendices and Schedules attached hereto, constitutes the entire agreement among the Parties with reference to the subject matter hereof, and supersedes all prior and contemporaneous

understandings or agreements, oral or written, between or among the Parties with respect to the subject matter of this LGIA. There are no other agreements, representations, warranties, or covenants which constitute any part of the consideration for, or any condition to, any Party's compliance with its obligations under this LGIA.

30.5 No Third Party Beneficiaries. This LGIA is not intended to and does not create rights, remedies, or benefits of any character whatsoever in favor of any persons, corporations, associations, or entities other than the Parties, and the obligations herein assumed are solely for the use and benefit of the Parties, their successors in interest and, where permitted, their assigns.

30.6 Waiver. The failure of a Party to this LGIA to insist, on any occasion, upon strict performance of any provision of this LGIA will not be considered a waiver of any obligation, right, or duty of, or imposed upon, such Party.

Any waiver at any time by either Party of its rights with respect to this LGIA shall not be deemed a continuing waiver or a waiver with respect to any other failure to comply with any other obligation, right, duty of this LGIA. Termination or Default of this LGIA for any reason by the Interconnection Customer shall not constitute a waiver of the Interconnection Customer's legal rights to obtain an interconnection from the Participating TO. Any waiver of this LGIA shall, if requested, be provided in writing.

30.7 Headings. The descriptive headings of the various Articles of this LGIA have been inserted for convenience of reference only and are of no significance in the interpretation or construction of this LGIA.

30.8 Multiple Counterparts. This LGIA may be executed in two or more counterparts, each of which is deemed an original but all constitute one and the same instrument.

30.9 Amendment. The Parties may by mutual agreement amend this LGIA by a written instrument duly executed by all of the Parties. Such amendment shall become effective and a part of this LGIA upon satisfaction of all Applicable Laws and Regulations.

30.10 Modification by the Parties. The Parties may by mutual agreement amend the Appendices to this LGIA by a written instrument duly executed by all of the Parties. Such amendment shall become effective and a part of this LGIA upon satisfaction of all Applicable Laws and Regulations.

30.11 Reservation of Rights. The CAISO and Participating TO shall each have the right to make a unilateral filing with FERC to modify this LGIA pursuant to section 205 or any other applicable provision of the Federal Power Act and FERC's rules and regulations thereunder with respect to the following Articles of this LGIA and

with respect to any rates, terms and conditions, charges, classifications of service, rule or regulation covered by these Articles:

> Recitals, 1, 2.1, 2.2, 2.3, 2.4, 2.6, 3.1, 3.3, 4.1, 4.2, 4.3, 4.4, 5 preamble, 5.4, 5.7, 5.8, 5.9, 5.12, 5.13, 5.18, 5.19.1, 7.1, 7.2, 8, 9.1, 9.2, 9.3, 9.5, 9.6, 9.7, 9.8, 9.10, 10.3, 11.4, 12.1, 13, 14, 15, 16, 17, 18, 19, 20, 21, 22, 23, 24.3, 24.4, 25.1, 25.2, 25.3 (excluding subparts), 25.4.2, 26, 28, 29, 30, Appendix D, Appendix F,and any other Article not reserved exclusively to the Participating TO or the CAISO below.

The Participating TO shall have the exclusive right to make a unilateral filing with FERC to modify this LGIA pursuant to section 205 or any other applicable provision of the Federal Power Act and FERC's rules and regulations thereunder with respect to the following Articles of this LGIA and with respect to any rates, terms and conditions, charges, classifications of service, rule or regulation covered by these Articles:

> 2.5, 5.1, 5.2, 5.3, 5.5, 5.6, 5.10, 5.11, 5.14, 5.15, 5.16, 5.17, 5.19 (excluding 5.19.1), 6, 7.3, 9.4, 9.9, 10.1, 10.2, 10.4, 10.5, 11.1, 11.2, 11.3, 11.5, 12.2, 12.3, 12.4, 24.1, 24.2, 25.3.1, 25.4.1, 25.5 (excluding 25.5.1), 27 (excluding preamble), Appendix A, Appendix B, Appendix C, and Appendix E.

The CAISO shall have the exclusive right to make a unilateral filing with FERC to modify this LGIA pursuant to section 205 or any other applicable provision of the Federal Power Act and FERC's rules and regulations thereunder with respect to the following Articles of this LGIA and with respect to any rates, terms and conditions, charges, classifications of service, rule or regulation covered by these Articles:

> 3.2, 4.5, 11.6, 25.3.2, 25.5.1, and 27 preamble.

The Interconnection Customer, the CAISO, and the Participating TO shall have the right to make a unilateral filing with FERC to modify this LGIA pursuant to section 206 or any other applicable provision of the Federal Power Act and FERC's rules and regulations thereunder; provided that each Party shall have the right to protest any such filing by another Party and to participate fully in any proceeding before FERC in which such modifications may be considered. Nothing in this LGIA shall limit the rights of the Parties or of FERC under sections 205 or 206 of the Federal Power Act and FERC's rules and regulations thereunder, except to the extent that the Parties otherwise mutually agree as provided herein.

30.12 No Partnership. This LGIA shall not be interpreted or construed to create an association, joint venture, agency relationship, or partnership among the Parties or to impose any partnership obligation or partnership liability upon any Party.

No Party shall have any right, power or authority to enter into any agreement or undertaking for, or act on behalf of, or to act as or be an agent or representative of, or to otherwise bind, another Party.

30.13 Joint and Several Obligations. Except as otherwise provided in this LGIA, the obligations of the CAISO, the Participating TO, and the Interconnection Customer are several, and are neither joint nor joint and several.

IN WITNESS WHEREOF, the Parties have executed this LGIA in multiple originals, each of which shall constitute and be an original effective agreement among the Parties.

Southern California Edison Company

By:_____

Title:_____

Date:_____

California Independent System Operator Corporation

By:_____

Title:_____

Date:_____

The Nevada Hydro Company, Inc.

By:_____

Title:_____

Date:_____

Appendices to LGIA

Appendix A Interconnection Facilities, Network Upgrades and Distribution Upgrades

Appendix B Milestones

Appendix C Interconnection Details

Appendix D Security Arrangements Details

Appendix E Commercial Operation Date

Appendix F Addresses for Delivery of Notices and Billings

Appendix G **[Not Used]**

Appendix H Interconnection Requirements for an Asynchronous Generating Facility

Appendix A
To LGIA

Interconnection Facilities, Network Upgrades and Distribution Upgrades

Within Appendix A of this LGIA, the Parties have identified and characterized certain interconnection components of the interconnection configuration as one of three types: i) Network Upgrades, ii) Interconnection Facilities, or iii) Distribution Upgrades. Studies conducted by the Parties during the Interconnection Study process associated with this LGIA analyzed these components as they are currently configured. Any determinations of need for these components made by the CAISO up to the date this LGIA is executed, or up to the date this LGIA is filed unexecuted at the Federal Energy Regulatory Commission, are limited to their current configurations.

1) **Interconnection Facilities:**

a) **Interconnection Customer's Interconnection Facilities:**

i) Interconnection Customer's Interconnection Facilities consist of one interconnection position in the Interconnection Customer's 500 kV switchrack located in the Interconnection Customer's proposed LEAPS Substation, using a one and a half circuit breaker configuration, two 500 kV circuit breakers, associated meters, metering equipment, protective relays disconnects, associated 500 kV generation tie-line ("Alberhill-LEAPS 500 kV Generation Tie-Line"), and appurtenant facilities.

ii) In additional to the above, the Interconnection Customer shall:

(1) Construct the Alberhill-LEAPS 500 kV Generation Tie-Line, approximately fifteen circuit miles from the LEAPS Generating Facility substation to the last structure owned by the Interconnection Customer outside of and nearest to the perimeter fence of the Alberhill Substation.

(2) Install optical ground wire ("OPGW") to provide the telecommunication path required for the line protection and one of the two telecommunication paths required for the SPS.

(3) Install all required CAISO-approved compliant metering at the LEAPS Generating Facility.

(4) Provide a metering cubicle for the Participating TO to install its retail metering equipment and related meters. Such cubicle must be placed at a location that would allow twenty-four hour access for the Participating TO's metering personnel.

(5) Install the following line protection relays at the termination point of the Alberhill-LEAPS 500 kV Generation Tie-Line at the Interconnection Customer's 500 kV switchyard, as specified by the Participating TO:

(a) Two GE C60 breaker management relays.
(b) One SEL-311L line current differential (digital F.O. channel).
(c) One GE L90 line current differential (digital F. O. channel).
(d) One GE D60 directional comparison pilot relaying (digital F.O./MW channel).
(e) One RFL 9745 tele-protection channel DTT (digital F.O. channel).
(f) One RFL 9745 tele-protection channel DTT (M/W channel).
(g) One 32/64 digital fault recorder.
(h) One ethernet service drop.
(i) One SEL-2030 relay.
(j) Install SPS to trip Electric Generating Units at the LEAPS Generating Facility for an outage of the Alberhill-LEAPS 500 kV Generation Tie-Line when the LEAPS Generating Facility is operating in pumping mode as follows:

(i) Two G.E. N60 relays (one for SPS A and one for SPS B) for line monitoring and sending of tripping signals.
(ii) One SEL – 2407 satellite synchronized clock.
(iii) The SPS will use the same telecommunication channels to be installed between Alberhill Substation and the LEAPS 500kV Switchyard to support the line protection requirements on the Alberhill – LEAPS 500kV Generation Tie-Line, so no additional channels are required.

(6) Provide adequate space and power sources within the Interconnection Customer's facilities for the installation of the Participating TO's telecommunication terminal equipment interfacing with the Interconnection Customer's Alberhill-LEAPS 500 kV Generation Tie-Line protection and SPS relays described in Section 1(a)(iii)(5) above and the Participating TO's remote terminal unit ("RTU") installed at the LEAPS Generating Facility.
(7) Install disconnect facilities in accordance with the Participating TO's Interconnection Handbook to comply with the Participating TO's switching and tagging procedures.

b) **Participating TO's Interconnection Facilities:** The Participating TO shall perform the following work pursuant to Article 11.2 of the LGIA:

i) Alberhill Substation:

(1) Install new telecommunication equipment to support the Alberhill-LEAPS 500 kV Generation Tie-Line protection, SCADA and the Participating TO's applicable voice and data requirements.
(2) Install new fiber optic cable to extend the Participating TO's existing fiber optic cable to the LEAPS Generating Facility. The combined (existing + new) fiber optic cable provides the required alternate route between Alberhill Substation and the LEAPS Generating Facility.
(3) Protection Relays: Install the following relay protection devices for the Alberhill-LEAPS 500 kV Generation Tie-Line protection.
(a) Two GE C60 breaker management relays.
(b) One SEL-311L line current differential (digital F.O. channel).
(c) One GE L90 line current differential (digital F. O. channel).
(d) One GE D60 directional comparison pilot relaying (digital F.O./MW channel).
(e) One RFL 9745 tele-protection channel DTT (digital F.O. channel).
(f) One RFL 9745 tele-protection channel DTT (M/W channel).
(g) One 32/64 digital fault recorder.
(h) One Ethernet service drop.
(i) One SEL-2030 relay.
(j) Install SPS to trip Electric Generating Units at the LEAPS Generating Facility for an outage of the Alberhill-LEAPS 500 kV Generation Tie-Line when the LEAPS Generating Facility is operating in pumping mode as follows:
(i) Two G.E. N60 relays (one for SPS A and one for SPS B) for line monitoring and sending of tripping signals.
(ii) One SEL – 2407 satellite synchronized clock.
The SPS will use the same telecommunication channels to be installed between Alberhill Substation and the LEAPS 500kV Switchyard to support the line protection requirements on the Alberhill – LEAPS 500kV Generation Tie-Line, so no additional channels are required.
(4) Other Station Elements to be Installed:
(a) Microwave antenna for communications.
(b) Dual communication channels on separate routes to support the line protection relays on the Alberhill-LEAPS 500 kV Generation Tie-Line. One of the communication channels will be provided by installing OPGW on the new Alberhill-LEAPS 500 kV Generation Tie-Line.

(c) Towers, line drop, and appurtenant facilities to interconnect the Alberhill-LEAPS 500 kV Generation Tie-Line.
(d) Retail meters and metering facilities.

ii) LEAPS Generating Facility:
(1) Install new telecommunication equipment to support the Alberhill-LEAPS 500 kV Generation Tie-Line protection, SCADA, and the Participating TO's applicable voice and data requirements. Notwithstanding the fact that such new telecommunication equipment will be located on the Interconnection Customer's side of the Point of Change of Ownership, such equipment will be owned and maintained by the Participating TO.
(2) Install an RTU to monitor the typical generating elements such as MW, MVAR, terminal voltage and circuit breaker status at each Electric Generating Unit and the plant auxiliary load. Notwithstanding the fact that such RTU will be located on the Interconnection Customer's side of the Point of Change of Ownership, such equipment will be owned and maintained by the Participating TO.

2) Network Upgrades:

a) **Stand Alone Network Upgrades**: None.

b) **Participating TO's Reliability Network Upgrades:**

i) **Alberhill 500 kV Substation** The Participating TO shall perform the following work pursuant to Article 11.3 of the LGIA:

(1) Engineer and construct the Alberhill 500 kV Substation at the site previously known as the Horse Ranch location, which will include the following elements:

(a) An initial four bay position, breaker-and-a-half 500 kV switchyard, using Gas Insulated System ("GIS") switchgear, and provide enough space necessary to accommodate a full design build-out capability of six 500 kV bay. Initially install four bays (1, 2, 3 and 4) with 7500A, 63KA, 500-kV buses and equipped with eight 500 kV bus PTs and provide the four bays with four 4000A, 500kV line positions, including nine 500 kV circuit breakers and associated disconnects in positions 1, 2, 3, and 4.
(b) The station should allow enough space for future installation of two additional bay positions and two 500kV capacitor banks.

(2) Mechanical Electrical Equipment Room ("MEER"): Install a new MEER building of approximately 65 ft. by 70 ft. to house the following equipment:
(a) Batteries and battery charger
(b) Light and power selector switch
(c) Light and power panel
(d) A.C. distribution panel
(e) D.C. distribution panel
(f) Relay Protection
(g) Telecommunication equipment
(h) Appurtenant facilities

(3) Protection Relays:

(a) 500 kV Transmission Lines:
(i) Equip Alberhill-LEAPS 500 kV Generation Tie-Line with three 500-kV line CCVTs & three 500-kV line surge arresters. Terminate (3) 2156 KCMIL ACSR/phase conductors to 108-ft high steel dead-end. Provide adequate riser and jumper connections to the GIS riser conductors.

(ii) Equip Alberhill-Valley 500-kV Transmission Line with three 500-kV line CCVTs & three 500-kV line surge arresters. Terminate (3) 2156 KCMIL ACSR/phase conductors to 108-ft high steel dead-end. Provide adequate riser and jumper connections to the GIS riser conductors.

(iii) Equip Alberhill-Serrano 500-kV Transmission Line with three 500-kV line CCVTs & three 500-kV line surge arresters. Terminate (3) 2156 KCMIL ACSR/phase conductors to 108-ft high steel dead-end. Provide adequate riser and jumper connections to the GIS riser conductors.

(iv) Install the following relays at each of the line positions:
1. Two G.E. C60 breaker management relays.
2. One SEL-311L line current differential (digital F.O. channel).
3. One G.E. L90 line current differential (digital F.O. channel).
4. One G.E. D 60 directional comparison pilot relaying (digital F.O./MW channel).
5. One RFL 9745 tele-protection channel DTT (digital F.O. channel).
6. One RFL 9745 tele-protection channel DTT (MW channel).

(b) Other Protection Devices:
(i) Install one 32/64 digital fault recorder.
(ii) Install one Ethernet service drop.
(iii) Install one SEL-2030 connected to all three SEL-311L relays.

(4) Other Station Elements to be Installed:
(a) Telecommunications tower and MW dish antenna.
(b) Perimeter fence with double barbed wire and a double door 20-ft. gate around the substation.
(c) Grounding grid to cover the substation area and additional 10-ft. outside the perimeter fence.
(d) Perform grading and site preparation for the substation area and additional 10-ft. outside the perimeter fence.
(e) 25-ft. wide paved driveway around both the 500 kV and 115 kV switchyards and the transformer banks with a branch of driveway to provide access to the relay room.
(f) All required control cable trenches from the relay room to the 500 kV switchyard.
(g) Install the necessary equipment, including one RTU to monitor the typical bulk power elements such as MW, MVAR, and phase amps at each line and also kV at lines and buses and all circuit breaker status/control, protection relays status and alarms. The installed equipment will transmit information to the Participating TO's Grid Control Center.

ii) Serrano – Valley 500 kV Transmission Line: Loop the existing Serrano-Valley 500 kV Transmission Line into Alberhill Substation and form two new lines: Alberhill-Serrano and Alberhill Valley 500 kV Transmission Lines. This work requires the installation of new dead-end steel structures at the tie-in locations along with related line hardware and conductors. From the tie-in locations, the lines will continue to the proposed new Alberhill Substation site. Note: Numerous routing alternatives exist for the lines connecting the tie-in locations to the Alberhill Substation site. They range in length from 1.5 to 2.5 miles per connecting line. These lines go over rocky and hilly terrain with numerous major turns. Single circuit towers are under consideration for this project. The project may need sixteen towers.

iii) Substations:

(a) Serrano Substation:
(i) Upgrade the Serrano-Valley 500 kV line protection as needed to change the line to the Alberhill-Serrano 500 kV Transmission Line.
(ii) Replace the existing LFCB relay with a new SEL-311L line current differential relay and modify the existing D60 and L90 relays to change the existing transfer trip schemes from Serrano Substation to Alberhill Substation.

(iii) Reconfigure the existing digital channel from Serrano Substation to Alberhill Substation and modify the existing SEL 2030 telecommunications processor with Ethernet to provide connection to the new SEL relay.

(b) Valley Substation:

(i) Upgrade the Serrano-Valley 500 kV line protection as needed to change the line to the Alberhill-Valley 500 kV transmission line.
(ii) Replace the existing LFCB relay with a new SEL-311L line current differential relay and modify the existing D60 and L90 relays to change the existing transfer trip schemes from Valley Substation to Alberhill Substation.
(iii) Reconfigure the existing digital channel from Valley Substation to Alberhill Substation and modify the existing SEL 2030 telecommunications processor with Ethernet to provide connection to the new SEL relay.

(c) Etiwanda Generating Station:

(i) Replace the 2000A wave trap on the Vista 220 kV line position with 3000A rated wave trap, with N-2 contingency rating of 3210A to support the maximum N-2 line loading of 3071A.
(ii) Replace twenty-four 63 kA 220 kV circuit breakers with new 80 kA rated circuit breakers and upgrade the Etiwanda 220 kV switchyard to 80 kA rating.
(iii) The scope of work for the switchyard upgrade has not been completed at this time. A scope of work and cost estimate has been prepared for the upgrade of a similar facility. At this time it is expected that the type of upgrades for this location would be very similar to those already scoped and estimated for the similar facility. Based on this assumption, it is expected that, in addition to the work shown in 2(c)(i) and 2(c)(ii) above, the following additional upgrades would be required:
1. Replace twenty-four 220 kV surge arresters.
2. Replace all line and bank vertical risers with tubular conductors.
3. Replace all 4/0 CU connectors to the ground grid with connectors compatible with 350 MCM bare copper conductor.
4. Install new sections of 350 MCM bare copper wire and interconnect with the 4/0 CU ground grid.
5. Install four gas insulated grounding switches.

iv) Telecommunications:

(a) Install new telecommunication equipment on separate routes to support the line protection relays on the Alberhill-Serrano and Alberhill-Valley 500 kV Transmission Lines. The new telecommunication equipment will be installed at Alberhill, Serrano, Valley, and Mira Loma Substations, as well as Santiago Peak communications site.

v) Corporate Real Estate: Survey the area surrounding Alberhill Substation and the 500 kV line loop and prepare topographical maps and line profiles to support the engineering and design activities.

vi) Permitting Activities: All work associated with obtaining the required permits, including the Certificate of Public Convenience and Necessity ("CPCN") with the California Public Utilities Commission.

vii) Valley-Serrano 500 kV line cutover: Design, engineer, construct and install the final towers associated with the line loop from the Valley-Serrano 500 kV line to Alberhill Substation, and cut over the Valley-Serrano 500 kV line to Alberhill Substation.

c) **Participating TO's Delivery Network Upgrades: None**

3) **Distribution Upgrades:** The Participating TO shall perform the following work pursuant to Article 11.3 of the LGIA:

a) **Valley Substation**: Replace six 31.5 kA 115 kV circuit breakers with new 40 kA rated circuit breakers and upgrade six 31.5 kA circuit breakers to 40 kA.

b) **Alberhill 115 kV Substation:** Notwithstanding Article 11.3 of the LGIA, if the Participating TO elects to construct the Alberhill 115 kV Substation, the Participating TO shall fund the Distribution Upgrades described in this Subsection 3(b). However, if the Participating TO elects not to construct such Distribution Upgrades described in this Section 3(b), then the LGIA will be amended to reflect the revised scope of work, costs, milestone schedule and payment schedule:

i) Engineer and construct the new Alberhill 115 kV Substation based on the one-line diagram specified in Section 6 below which will include the following elements:
(1) One 115 kV open air switchrack as shown on the one-line diagram specified in Section 6 below, with five breaker–and–a-half positions with enough available space to allow the future installation of five additional positions.
(2) Two outdoor type 500/115kV, 560 MVA transformer banks with enough space to allow a future addition of two more 500/115 kV, 560 MVA units for a total of four banks.
(3) The station will allow enough space for future installation of two 115kV capacitor banks.
(4) Protection equipment to support the 115 kV system requirements.
(5) Perimeter fence, grounding grid, grading, driveways, and cable trenches to support its operation and maintenance.

4) **Point of Change of Ownership:** The point where the conductors of the Alberhill–LEAPS 500 kV Generation Tie-Line are attached to the first structure located directly outside the Alberhill 500 kV Substation property line. This would be the side of the structure facing the substation. The Interconnection Customer shall own and maintain said structure, and the conductors connecting this structure with the second structure located outside Alberhill Substation, including the jumper loop. The Participating TO shall own and maintain the Alberhill 500 kV Substation, the Alberhill 500/115 kV Substation, Valley-Serrano line loop, rights-of-way associated with the Valley-Serrano line loop, all circuit breakers, disconnects, relay facilities, metering within the substation, land, and the line drops in their entirety from the point they are attached to the first structure outside the substation's property line. The Participating TO shall own the insulators that are used to attach the Participating TO-owned conductors to the Interconnection Customer-owned structure.

5) Point of Interconnection: Participating TO's Alberhill Substation 500 kV bus.

6) One-Line Diagram of Interconnection to Alberhill Substation:

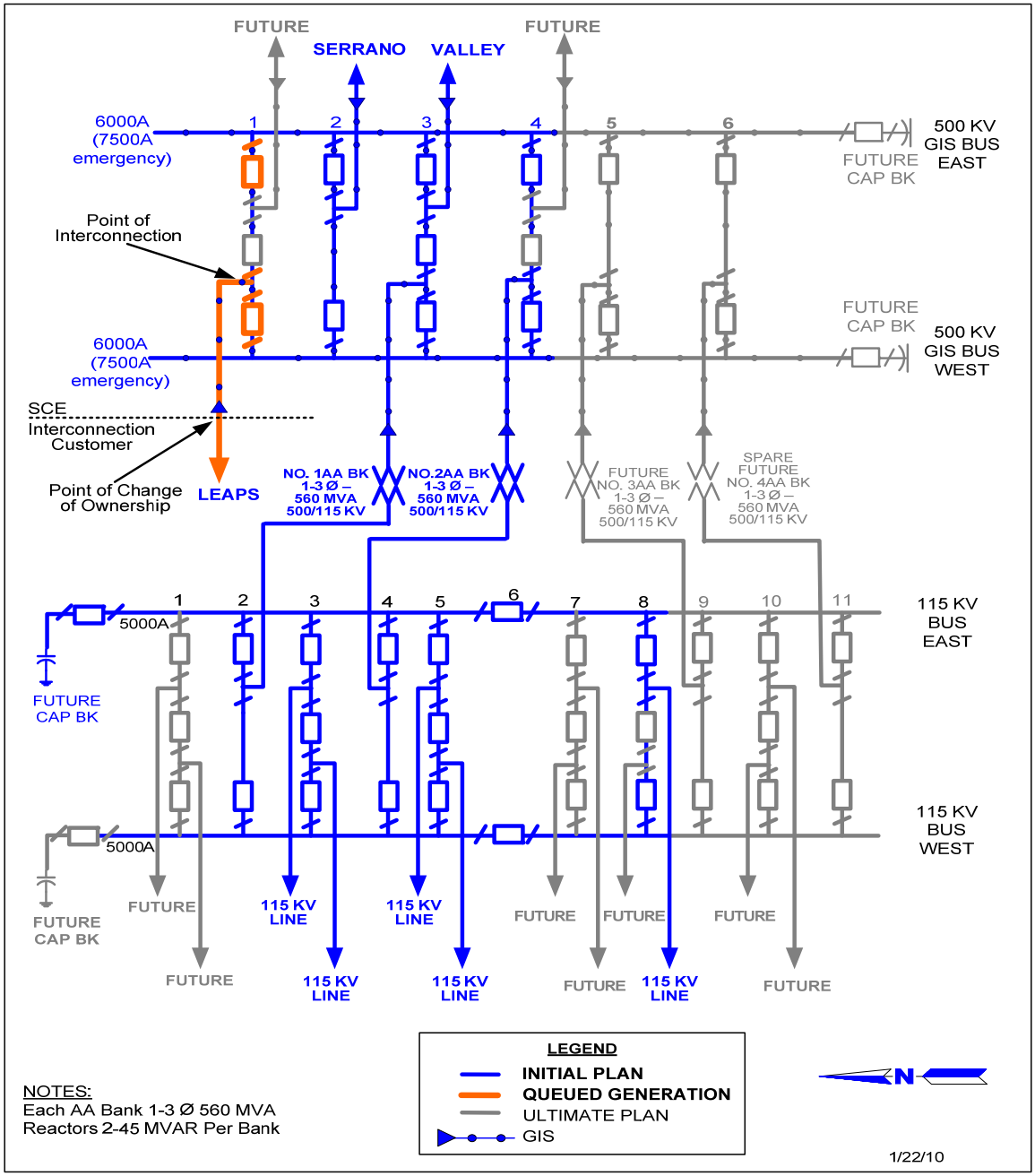

Note: The LEAPS Generating Facility is proposed to be connected to the Participating TO's Alberhill Substation Project. This substation project is still under development as part of the long-term transmission plan and has been approved by the CAISO Board. Also, a CPCN for the Alberhill 500/115 KV Substation and Valley/Serrano Line loop has been filed at the CPUC. In the event that SCE modifies its plan for the Alberhill 500/115 kV Substation, or the substation project does not receive CPUC approval, then the Participating TO would develop an alternate plan to connect the Generating Facility to the Valley – Serrano 500kV Transmission Line. The alternate plan for connection to the Valley-Serrano 500kV Transmission Line may be subject to CPUC review and concurrence if this information has not yet been evaluated as part of the LGIP review process.

7) **Transmission Credits:** The Interconnection Customer may elect, pursuant to Article 11.4 of the LGIA, to receive Congestion Revenue Rights in lieu of repayment of the applicable amounts

advanced for the costs of the Network Upgrades as transmission credits. The transmission credits will equal the sum of the Delivery Network Upgrades Payment and the Reliability Network Upgrades Payment as shown in Section 17 of this Appendix A.

8) **Interconnection Studies:** Operational Study**:** As was identified in the Interconnection Facilities Study report, an operational study will be required one year prior to the interconnection of the LEAPS Generating Facility due to the changes in the generation interconnection queue and the transmission system since the Interconnection Facilities Study was completed. This study may identify Participating TO's Reliability Network Upgrades and Participating TO's Delivery Network Upgrades that are diff**e**rent from those included in the LGIA.

9) **Security Amount for the Participating TO's Interconnection Facilities, Distribution Upgrades, and Network Upgrades:**

a) Pursuant to Article 11.5 and Appendix B of the LGIA, and subject to the security posting timeline set forth in Table B.1 of Appendix B, the Interconnection Customer shall:
   i) Provide Credit Support in the amount of $5,116,734.00 in accordance with the table shown in Appendix A, Section 9(b), to cover the costs for constructing, procuring and installing the Participating TO's Interconnection Facilities. The disposition of any released Credit Support shall be directed by the Interconnection Customer.
   ii) Provide Credit Support in the amount of $61,976,185.00 in accordance with the table shown in Appendix A, Section 9(d), to cover the costs for constructing, procuring and installing the Participating TO's Network Upgrades. The disposition of any released Credit Support shall be directed by the Interconnection Customer.
   iii) Provide Credit Support in the amount of $2,876,845.00 in accordance with the table shown in Appendix A, Section 9(c), to cover the costs for constructing, procuring and installing the Participating TO's Distribution Upgrades. The disposition of any released Credit Support shall be directed by the Interconnection Customer.

(b) The Participating TO will accept Credit Support for the Participating TO's Interconnection Facilities in the form of a guarantee, a surety bond, letter of credit or other form of security that is reasonably acceptable to the Participating TO and is consistent with the Uniform Commercial Code of the applicable jurisdiction. The Interconnection Customer shall provide to the Participating TO, the Credit Support, posted as follows and maintained pursuant to Article 11.5 of the LGIA:

• Date Due*	Credit Support Amount
• 7/1/2015	$50,643.00
• 10/1/2015	$78,036.00
• 1/1/2016	$121,307.00
• 4/1/2016	$179,506.00
• 7/1/2016	$256,281.00
• 10/1/2016	$347,777.00
• 1/1/2017	$451,585.00
• 4/1/2017	$525,299.00
• 7/1/2017	$553,380.00
• 10/1/2017	$525,299.00
• 1/1/2018	$463,189.00
• 4/1/2018	$365,453.00
• 7/1/2018	$269,306.00
• 10/1/2018	$188,629.00
• 1/1/2019	$131,029.00
• 4/1/2019	$86,415.00
• 7/1/2019	$56,081.00

• 10/1/2019	$13,830.00

(c) The Participating TO will accept Credit Support for the Participating TO's Distribution Upgrades in the form of a guarantee, a surety bond, letter of credit or other form of security that is reasonably acceptable to the Participating TO and is consistent with the Uniform Commercial Code of the applicable jurisdiction. The Credit Support must be satisfied by an entity that meets the creditworthiness requirement of the Participating TO. The Interconnection Customer shall provide to the Participating TO, the Credit Support, posted as follows and maintained pursuant to Article 11.5 of the LGIA:

• Date Due*	Credit Support Amount
• 7/1/2015	$28,473.00
• 10/1/2015	$43,875.00
• 1/1/2016	$68,203.00
• 4/1/2016	$100,926.00
• 7/1/2016	$144,091.00
• 10/1/2016	$195,534.00
• 1/1/2017	$253,899.00
• 4/1/2017	$295,344.00
• 7/1/2017	$311,133.00
• 10/1/2017	$295,344.00
• 1/1/2018	$260,424.00
• 4/1/2018	$205,473.00
• 7/1/2018	$151,414.00
• 10/1/2018	$106,056.00
• 1/1/2019	$73,669.00
• 4/1/2019	$48,586.00
• 7/1/2019	$31,531.00
• 10/1/2019	$7,775.00

(d) The Participating TO will accept Credit Support for the Participating TO's Network Upgrades in the form of a guarantee, a surety bond, letter of credit or other form of security that is reasonably acceptable to the Participating TO and is consistent with the Uniform Commercial Code of the applicable jurisdiction. The Credit Support must be satisfied by an entity that meets the creditworthiness requirement of the Participating TO. The Interconnection Customer shall provide to the Participating TO, the Credit Support, posted as follows and maintained pursuant to Article 11.5 of the LGIA:

• Date Due*	Credit Support Amount
• 7/1/2015	$613,407.00
• 10/1/2015	$945,211.00
• 1/1/2016	$1,469,303.00
• 4/1/2016	$2,174,247.00
• 7/1/2016	$3,104,171.00
• 10/1/2016	$4,212,416.00
• 1/1/2017	$5,469,783.00
• 4/1/2017	$6,362,631.00
• 7/1/2017	$6,702,767.00
• 10/1/2017	$6,362,631.00
• 1/1/2018	$5,610,356.00
• 4/1/2018	$4,426,533.00

• 7/1/2018	$3,261,954.00
• 10/1/2018	$2,284,763.00
• 1/1/2019	$1,587,062.00
• 4/1/2019	$1,046,692.00
• 7/1/2019	$679,267.00
• 10/1/2019	$167,507.00

* The due dates for Interconnection Customer to provide Credit Support are subject to change should the milestone dates set forth in Appendix B change.

10) **Security Amount for Estimated Tax Liability:** Pursuant to Article 5.17.4 of the LGIA, the Interconnection Customer's estimated tax liability shall be calculated as follows:

(Current Tax Rate x (Gross Income Amount – Present Value of Tax Depreciation))/(1 – Current Tax Rate) = 35%

Estimated tax liability for Participating TO's Interconnection Facilities and Distribution Upgrades = (35% x (Interconnection Facilities Cost + Distribution Upgrades Cost)) = (35% x ($4,663,045.00+$2,621,750.00) = $2,549,678.25

Interconnection Facilities Cost = $4,663,045.00

Distribution Upgrades Cost = $2,621,750.00

Based upon the estimated tax liability, the Interconnection Customer shall provide Credit Support to the Participating TO in the form of a guarantee, a surety bond, letter of credit or other form of security that is reasonably acceptable to the Participating TO and is consistent with the Uniform Commercial Code of the applicable jurisdiction.

The security must be made by an entity that meets the creditworthiness requirement of the Participating TO. The Interconnection Customer shall provide to the Participating TO security, pursuant to Article 5.17.3 and Appendix B of the LGIA, posted as follows:

• Date Due*	Credit Support Amount
• 7/1/2015	$27,690.60
• 10/1/2015	$70,359.45
• 1/1/2016	$136,687.95
• 4/1/2016	$234,839.15
• 7/1/2016	$374,969.35
• 10/1/2016	$565,128.20
• 1/1/2017	$812,047.60
• 4/1/2017	$1,099,272.65
• 7/1/2017	$1,401,852.20
• 10/1/2017	$1,689,077.25
• 1/1/2018	$1,942,341.80
• 4/1/2018	$2,142,165.90
• 7/1/2018	$2,289,417.90
• 10/1/2018	$2,392,557.65
• 1/1/2019	$2,464,201.95
• 4/1/2019	$2,511,452.30
• 7/1/2019	$2,542,116.50
• 10/1/2019	$2,549,678.25

Upon notification of the Annual Tax Security Reassessment, the Interconnection Customer shall modify its Tax Security accordingly. If the Annual Tax Security Reassessment results in a deficiency in the Tax Security amount, the Interconnection Customer will be required to increase its Tax Security Amount within 30 days after receipt of the deficiency notification. If the Annual Tax Security Reassessment results in a reduction of the Tax Security amount, the Interconnection Customer may choose to reduce its Tax Security amount or maintain the Tax Security in the current amount for the following year.

The Annual Tax Security Reassessment will be calculated utilizing the following methodology:

1) Tax Assessment Event: ((Current Tax Rate x (Gross income - NPV Tax Depreciation)) + Interest)/(1 - Current Tax Rate)

2) Subsequent Taxable Event: (Current Tax Rate x (Replacement Facility Cost – NPV Tax Depreciation))/(1-Current Tax Rate)

11) **Removal of the Participating TO's Interconnection Facilities:** Following termination of the LGIA, the Participating TO will remove the Participating TO's Interconnection Facilities from service to the Interconnection Customer pursuant to Article 2.5 of the LGIA. On or before the date one year following termination of this LGIA, the Participating TO shall notify the Interconnection Customer whether the Participating TO intends to physically remove the Participating TO's Interconnection Facilities, or any part thereof. If the Participating TO intends to physically remove the Participating TO's Interconnection Facilities or any part thereof, then the Participating TO shall physically remove such facilities within two years from the date of notification of intent, and the Interconnection Customer shall pay the Removal Cost pursuant to Section 2.4.3 of the LGIA.. If the Participating TO does not intend to physically remove the Participating TO's Interconnection Facilities, or any part thereof, then the Interconnection Customer shall have no obligation to pay such Removal Cost.

12) **Additional Definitions:** For the purposes of these Appendices, the following terms, when used with initial capitalization, whether in the singular or the plural, shall have the meanings specified below:

a) Accounting Practice: Generally accepted accounting principles and practices applicable to electric utility operations.

b) Annual Tax Security Reassessment: In accordance with the directives of FERC Orders 2003-A and 2003-B associated with Article 5.17.4 of the LGIA, the annual reassessment of the current tax liability, which will commence the first year after Interconnection Customer's in-service date.

c) Capital Additions: Any modifications to the Participating TO's Interconnection Facilities in accordance with Article 5.19 of the LGIA. Such modifications may be any Units of Property which are added to the Participating TO's Interconnection Facilities, the enlargement, modification or betterment of any Units of Property constituting a part of the Participating TO's Interconnection Facilities, or the replacement of any Units of Property constituting a part of the Participating TO's Interconnection Facilities (irrespective of whether such replacement constitutes an enlargement, modification or betterment of that which it replaces), the costs of which additions, enlargements, modifications, betterments or replacements would in accordance with Accounting Practice be capitalized and have not previously been included in the Interconnection Facilities Cost. If Capital Additions are required in order to benefit the Participating TO, or because of damage caused by negligence or willful misconduct of the Participating TO, then the Interconnection Customer will not bear cost responsibility for such Capital Additions, and no adjustment will be made to the Interconnection Facilities Cost, and no Capital Additions Cost or One-Time Cost will be charged to the Interconnection Customer, for such Capital Additions.

d) Capital Additions Cost: All costs, excluding One-Time Costs, determined by the Participating TO to be associated with the design, engineering, procurement, construction and installation of Capital Additions.

e) Capital Additions Payment: The sum of the Capital Additions Cost and the One-Time Costs of the work performed by the Participating TO associated with the Capital Additions

f) CPUC: The California Public Utilities Commission, or its regulatory successor.

g) Credit Support: A guarantee, surety bond, letter of credit, or other form of security meeting the requirements of Article 11.5 of the LGIA.

h) Customer-Financed Monthly Rate: The rate most recently adopted by the CPUC for application to the Participating TO's retail electric customers for added facilities, which does not compensate the Participating TO for replacement of added facilities. The currently effective Customer-Financed Monthly Rate is provided in Section 16 of this Appendix A.

i) Delivery Network Upgrades Cost: All costs, excluding One-Time Costs, determined by the Participating TO to be associated with the design, engineering, procurement, construction and installation of the Participating TO's Delivery Network Upgrades. The Delivery Network Upgrades Cost is provided in Section 15 of this Appendix A.

j) Delivery Network Upgrades Payment: The sum of the Delivery Network Upgrades Cost and the One-Time Costs associated with the Delivery Network Upgrades, as provided in Section 17 of this Appendix A.

k) Distribution Upgrades Cost: All costs, excluding ITCC and One-Time Costs, determined by the Participating TO to be associated with the design, engineering, procurement, construction and installation of the Distribution Upgrades. The Distribution Upgrades Cost is provided in Section 15 of this Appendix A.

l) Distribution Upgrades Payment: The sum of the Distribution Upgrades Cost and the One-Time Cost of the work performed by the Participating TO associated with the Distribution Upgrades, as provided in Section 17 of this Appendix A.

m) Interconnection Facilities Charge: The monthly charge to the Interconnection Customer to recover the revenue requirements for the Participating TO's Interconnection Facilities, calculated as the product of the Customer-Financed Monthly Rate and the Interconnection Facilities Cost. The Interconnection Facilities Charge is provided in Section 16 of this Appendix A.

n) Interconnection Facilities Completion Date: The date upon which the construction of the Participating TO's Interconnection Facilities is complete and such facilities are successfully tested and ready for service.

o) Interconnection Facilities Cost: All costs, excluding ITCC and One-Time Costs, determined by the Participating TO to be associated with the design, engineering, procurement, construction and installation of the Participating TO's Interconnection Facilities. The Interconnection Facilities Cost is provided in Section 15 of this Appendix A.

p) Interconnection Facilities Payment: The sum of the Interconnection Facilities Cost and the One-Time Cost of the work performed by the Participating TO associated with the Participating TO's Interconnection Facilities, as provided in Section 17 of this Appendix A.

q) ITCC: The ITCC is equal to the estimated tax liability and is the Income Tax Component of Contribution specified in the Preliminary Statement, Part M of the Participating TO's tariff on file with the CPUC, applicable to the Interconnection Facilities Cost and Distribution Upgrades Cost. The ITCC applicable to the Interconnection Facilities Cost and Distribution Upgrades Cost is described in Section 10 of this Appendix A.

r) One-Time Costs: All costs determined by the Participating TO to be associated with the design, engineering, procurement, construction and installation of the Participating TO's Interconnection Facilities, Distribution Upgrades, Network Upgrades or Capital Additions which are not capitalized.

s) Reliability Network Upgrades Cost: All costs, excluding One-Time Costs, determined by the Participating TO to be associated with the design, engineering, procurement, construction and installation of the Participating TO's Reliability Network Upgrades. The Reliability Network Upgrades Cost is provided in Section 15 of this Appendix A.

t) Reliability Network Upgrades Payment: The sum of the Reliability Network Upgrades Cost and the One-Time Costs of the work performed by the Participating TO associated with the Participating TO's Reliability Network Upgrades, as provided in Section 17 of this Appendix A.

u) Removal Cost: The actual cost the Participating TO incurs for the removal of the Participating TO's Interconnection Facilities, which is calculated as the amount, if positive, of the costs of removal minus the salvage value of the Participating TO's Interconnection Facilities.

v) Special Protection System ("SPS"): A system that reduces or trips generation under contingency outages to maintain system stability or to limit overloads on system facilities.

w) Tax Security: The Interconnection Customer's provision of Security with respect to the Interconnection Customer's tax indemnification obligations, provided in accordance with Article 5.17.3.

x) Units of Property: As described in FERC's "List of Units of Property for Use in Connection with Uniform System of Accounts Prescribed for Public Utilities and Licensees" in effect as of the date of this LGIA, as such list may be amended from time to time.

13) **Charges:**

a) The Interconnection Customer shall pay to the Participating TO the following charges in accordance with the LGIA: (i) Delivery Network Upgrades Payment; (ii) Distribution Upgrades Payment; (iii) Interconnection Facilities Payment; (iv) Reliability Network Upgrades Payment; (v) Capital Additions Payment; (vi) Interconnection Facilities Charge; (vii) any reimbursable FERC fees pursuant to Section 14(e) of this Appendix A; (viii) Removal Cost pursuant to Articles 2.4.3 and 2.5 of the LGIA and Section 14(d) of this Appendix A; and (ix) termination and disconnection costs pursuant to Articles 2.4 and 2.5 of the LGIA.

b) The Delivery Network Upgrades Cost, Distribution Upgrades Cost, Interconnection Facilities Cost, Reliability Network Upgrades Cost, associated One-Time Costs and Removal Cost shall be compiled in accordance with Accounting Practice.

c) If, during the term of the LGIA, the Participating TO executes an agreement to provide service to another entity (including retail load) which contributes to the need for the Participating TO's Interconnection Facilities, the charges due hereunder may be adjusted to appropriately reflect such service based on the Participating TO's cost allocation principles in effect at such time and shall be subject to FERC's approval.

14) **Supplemental Billing and Payment Provisions:**

a) Pursuant to Article 12.1 of the LGIA, the Participating TO shall submit to the Interconnection Customer invoices due for the preceding month for the Delivery Network Upgrades Payment, Distribution Upgrades Payment, Interconnection Facilities Payment, and the Reliability Network Upgrades Payment.

b) Pursuant to Article 12.1 of the LGIA, commencing on or following the Interconnection Facilities Completion Date, each month the Participating TO will render bills to the Interconnection Customer for the Interconnection Facilities Charge. The Interconnection Facilities Charge payments shall initially be based on the estimated Interconnection Facilities Cost as specified in Section 15 of this Appendix A. The Interconnection Facilities Charge for the first and last month of service hereunder shall be pro-rated based on the number of Calendar Days in which service was provided during said months.

c) In accordance with Articles 5.19.3 and 10.5 and pursuant to Article 12.1 of the LGIA, the Participating TO shall submit to the Interconnection Customer invoices due for the preceding month for the payments due for Capital Additions, if any.

   i) For Capital Additions that are the cost responsibility of the Interconnection Customer, prior to commencing work, the Participating TO will provide at least sixty (60) Calendar Days advance written notification to the Interconnection Customer, except that, at the Participating TO's sole discretion, the Participating TO may commence the work on the Capital Additions with either shorter advance written notification or written notification after the work has commenced if the Participating TO determines that the Capital Additions are required in accordance with safety or regulatory requirements or to preserve system integrity or reliability. The written notification will include the estimated cost of the Capital Additions, and the amount of and due date for the security, if any, required to be paid by the Interconnection Customer sufficient to cover the costs for constructing, procuring and installing the Capital Additions consistent with the applicable terms of Article 11.5 of the LGIA.

   ii) Except as provided in Section 12(c) above, if certain Participating TO's Interconnection Facilities are removed to accommodate Capital Additions and such removal results in a change in the Interconnection Facilities Cost, the Interconnection Facilities Charge shall be adjusted as of the in-service date of such Capital Additions to reflect the change in the Interconnection Facilities Cost.

   iii) Except as provided in Section 12(c) above, if Capital Additions result in an increase in the Interconnection Facilities Cost, then the Interconnection Facilities Charge shall be adjusted as of the in-service date of such Capital Additions to reflect the change in such costs.

   iv) The Participating TO's invoices shall be based on its estimated cost of the Capital Additions. As soon as reasonably practicable, but within twelve (12) months after the completion of the construction of any Capital Additions, the Participating TO shall provide an invoice of the final cost of the construction of the Capital Additions, and shall set forth such costs in sufficient detail to enable the Interconnection Customer to compare the actual costs with the estimates and to ascertain deviations, if any, from the cost estimates. The Participating TO shall refund to the Interconnection Customer any amount by which the actual payment by the Interconnection Customer for estimated costs exceeds the actual costs of construction within thirty (30) Calendar Days of the issuance of such final construction invoice; or, in the event the actual costs of construction exceed the Interconnection Customer's payment for estimated costs, then the Interconnection Customer shall pay to the Participating TO any amount by which the actual costs of construction exceed the payment by the Interconnection Customer for estimated costs within thirty (30) Calendar Days of the issuance of such final construction invoice.

d) If, in accordance with the removal of the Participating TO's Interconnection Facilities specified in Section 11 of this Appendix A, the Participating TO decides to physically remove the Participating TO's Interconnection Facilities, or any part thereof, the Participating TO shall render a bill to the Interconnection Customer for the Removal Cost. The Interconnection Customer shall pay the Removal Cost in accordance with Articles 2.4.3 and 2.5 of the LGIA. Such billing shall be initially based on the Participating TO's estimate of the Removal Cost. Within twelve (12) months following the removal of the Participating TO's Interconnection Facilities, or any part thereof, the

Participating TO shall determine the actual Removal Cost and provide the Interconnection Customer with a final invoice. The Participating TO shall refund to the Interconnection Customer any amount by which the payment by the Interconnection Customer for the estimated Removal Cost exceeds the actual Removal Cost within thirty (30) Calendar Days of the issuance of such final invoice; or, in the event the actual Removal Cost exceeds the Interconnection Customer's payment for the estimated Removal Cost, then the Interconnection Customer shall pay to the Participating TO any amount by which the actual Removal Cost exceeds the payment by the Interconnection Customer for the estimated Removal Cost within thirty (30) Calendar Days of the issuance of such final invoice.

e) The Interconnection Customer shall reimburse the Participating TO for all fees and charges related to the FERC fees and annual charges provided in Sections 381 and 382 of the FERC's regulations (18 C.F.R. § 381 and 382), as such regulation may from time to time be amended, that are imposed on the Participating TO which are attributable to the service provided under the LGIA, or any amendments thereto. The Participating TO will render bills to the Interconnection Customer for any such fees and charges incurred since the preceding billing, together with documentation that supports the attributed amounts. As of the Effective Date, no such fees and charges have been imposed on the Participating TO attributable to the service provided under the LGIA.

15) Interconnection Facilities Cost, Distribution Upgrades Cost, and Network Upgrades Cost Summary:

a) Estimated Cost:

Element-	Interconnection Facilities Cost (A)	Distribution Upgrades Cost (B)	Reliability Network Upgrades Cost (C)	Reliability Network Upgrades Cost** (D)	Interconnection Facilities One-Time Cost (E), Distribution Upgrades One-Time Cost (F), Reliability Network Upgrades One-Time Cost (G)	Total Facilities Cost* (H) (A+B+C+E+F+G)	Total Costs to Interconnection Customer* (I) (A+B+D+E+F+G)	ITCC***
Serrano-Valley 500kV Transmission Line-Line Loop			$28,385,876.00	$0.00	$0.00	$28,385,876.00	$0.00	$0.00
Alberhill 500 kV Substation	$2,514,405.00		$92,213,135.00	$22,431,255.00	$0.00	$94,727,540.00	$24,945,660.00	$880,041.75
Serrano Substation			$136,859.00	$136,859.00	$0.00	$136,859.00	$136,895.00	$0.00
Valley Substation		$2,621,750.00	$136,859.00	$136,859.00	$0.00	$2,758,609.00	$2,758,609.00	$917,612.50
Etiwanda Substation			$33,775,728.00	$33,775,728.00	$0.00	$33,775,728.00	$33,775,728.00	$0.00
Telecom	$2,078,299.00		$6,445,370.00	$0.00	$0.00	$8,523,669.00	$2,078,299.00	$727,404.65
Power System Controls-	$70,341.00		$88,961.00	$0.00	$0.00	$159,302.00	$70,341.00	$24,619.35
Corporate Real Estate			$23,201,368.00	$0.00	$0.00	$23,201,368.00	$0.00	$0.00
Licensing & Environmental			$24,844,599.00	$0.00	$0.00	$24,844,599.00	$0.00	$0.00
Total	$4,663,045.00	$2,621,750.00	$209,228,755.00	$56,480,701.00	$0.00	$216,513,550.00	$63,765,496.00	$2,549,678.25

Costs are shown in nominal dollars

*Note: The Interconnection Customer will be responsible for the Total Facilities Cost shown in Column (H) of the above table, including the Reliability Network Upgrades Cost shown in Column (C), if the Participating TO chooses not to proceed with the 115 kV portion of the Alberhill 500/115 kV Substation.

In such event, the LGIA will be amended to reflect the revised scope of work, costs, milestone schedule and payment schedule. The Reliability Network Upgrades Cost shown in Column (C) reflects the facilities and costs necessary to engineer, design and construct the Reliability Network Upgrades, as specified in Appendix A, Section 2.

**Note: The Interconnection Customer will be responsible for paying the Total Costs to Interconnection Customer shown in Column (I) of the above table, including the Reliability Network Upgrades Cost shown in Column (D), if the Participating TO proceeds with the 115 kV portion of the Alberhill 500/115 kV Substation.

***Note: ITCC/Estimated tax liability will be provided by Interconnection Customer in accordance with Appendix A, Section 10.

b) Actual Cost:

(To be completed later)

Element-	Interconnection Facilities Cost	Distribution Upgrades Cost	Reliability Network Upgrades Cost	Interconnection Facilities One-Time Cost	Distribution Upgrades One-Time Cost	Reliability Network Upgrades One-Time Cost	Total Cost	ITCC
Serrano-Valley 500kV Transmission Line-Line Loop								
Alberhill 500/115kV Substation								
Serrano Substation								
Valley Substation								
Etiwanda Substation								
Telecom								
Power System Controls								
Corporate Real Estate								
Permitting								
Total								

16) **Interconnection Facilities Charge**:

Interconnection Facilities Charge = Customer Financed Monthly Rate x (Interconnection Facilities Cost)

Effective	Customer-Financed Monthly Rate	Estimated Interconnection Facilities Cost	Interconnection Facilities Charge Based on Estimated Cost	Actual Interconnection Facilities Cost	Interconnection Facilities Charge based on actual cost
As of the Interconnection Facilities Completion Date	0.39%	$4,663,045.00	$18,185.88	[to be inserted after true-up]	[to be inserted after true-up]

17) **<u>Interconnection Facilities Payment, Distribution Upgrades Payment, and Reliability Network Upgrades Payment</u>:**

An estimate of the monthly incurred costs is shown below. [Note: This estimate assumes that the LGIA has been executed and work starts by the Effective Date to achieve an In-Service Date approximately fifty-two (52) months following the Effective Date.]

Payment No.	Payment Due Date	Interconnection Facilities Cost (A)	Distribution Upgrades Cost (B)	Reliability Network Upgrades Cost (C)	Total Payment Amount (D=A+B+C)	ITCC (E=(A+B)x.35)
1	7/1/15	$14,478.00	$8,140.00	$175,361.00	$197,979.00	$7,916.30
2	8/1/15	$16,767.00	$9,427.00	$203,095.00	$229,289.00	$9,167.90
3	9/1/15	$19,398.00	$10,906.00	$234,951.00	$265,255.00	$10,606.40
4	10/1/15	$22,410.00	$12,600.00	$271,450.00	$306,460.00	$12,253.50
5	11/1/15	$25,854.00	$14,536.00	$313,145.00	$353,535.00	$14,136.50
6	12/1/15	$29,772.00	$16,739.00	$360,616.00	$407,127.00	$16,278.85
7	1/1/16	$35,080.00	$19,723.00	$424,899.00	$479,702.00	$19,181.05
8	2/1/16	$40,225.00	$22,616.00	$487,213.00	$550,054.00	$21,994.35
9	3/1/16	$46,002.00	$25,864.00	$557,191.00	$629,057.00	$25,153.10
10	4/1/16	$52,450.00	$29,490.00	$635,304.00	$717,244.00	$28,679.00
11	5/1/16	$59,599.00	$33,509.00	$721,882.00	$814,990.00	$32,587.80
12	6/1/16	$67,457.00	$37,927.00	$817,061.00	$922,445.00	$36,884.40
13	7/1/16	$76,014.00	$42,738.00	$920,711.00	$1,039,463.00	$41,563.20
14	8/1/16	$85,231.00	$47,921.00	$1,032,359.00	$1,165,511.00	$46,603.20
15	9/1/16	$95,036.00	$53,432.00	$1,151,101.00	$1,299,569.00	$51,963.80
16	10/1/16	$105,310.00	$59,209.00	$1,275,544.00	$1,440,063.00	$57,581.65
17	11/1/16	$115,892.00	$65,159.00	$1,403,732.00	$1,584,783.00	$63,367.85
18	12/1/16	$126,575.00	$71,166.00	$1,533,140.00	$1,730,881.00	$69,209.35
19	1/1/17	$140,464.00	$78,975.00	$1,701,363.00	$1,920,802.00	$76,803.65
20	2/1/17	$150,792.00	$84,781.00	$1,826,451.00	$2,062,024.00	$82,450.55
21	3/1/17	$160,329.00	$90,143.00	$1,941,969.00	$2,192,441.00	$87,665.20
22	4/1/17	$168,735.00	$94,870.00	$2,043,792.00	$2,307,397.00	$92,261.75
23	5/1/17	$175,683.00	$98,776.00	$2,127,944.00	$2,402,403.00	$96,060.65
24	6/1/17	$180,881.00	$101,698.00	$2,190,895.00	$2,473,474.00	$98,902.65
25	7/1/17	$184,097.00	$103,507.00	$2,229,858.00	$2,517,462.00	$100,661.40
26	8/1/17	$185,186.00	$104,119.00	$2,243,051.00	$2,532,356.00	$101,256.75
27	9/1/17	$184,097.00	$103,507.00	$2,229,858.00	$2,517,462.00	$100,661.40
28	10/1/17	$180,881.00	$101,698.00	$2,190,895.00	$2,473,474.00	$98,902.65
29	11/1/17	$175,683.00	$98,776.00	$2,127,944.00	$2,402,403.00	$96,060.65
30	12/1/17	$168,735.00	$94,870.00	$2,043,792.00	$2,307,397.00	$92,261.75
31	1/1/18	$164,449.00	$92,460.00	$1,991,878.00	$2,248,787.00	$89,918.15
32	2/1/18	$154,666.00	$86,960.00	$1,873,389.00	$2,115,015.00	$84,569.10
33	3/1/18	$144,074.00	$81,004.00	$1,745,089.00	$1,970,167.00	$78,777.30
34	4/1/18	$133,009.00	$74,784.00	$1,611,070.00	$1,818,863.00	$72,727.55
35	5/1/18	$121,783.00	$68,471.00	$1,475,084.00	$1,665,338.00	$66,588.90
36	6/1/18	$110,661.00	$62,218.00	$1,340,379.00	$1,513,258.00	$60,507.65
37	7/1/18	$99,865.00	$56,148.00	$1,209,611.00	$1,365,624.00	$54,604.55
38	8/1/18	$89,563.00	$50,356.00	$1,084,833.00	$1,224,752.00	$48,971.65
39	9/1/18	$79,878.00	$44,910.00	$967,510.00	$1,092,298.00	$43,675.80
40	10/1/18	$70,885.00	$39,855.00	$858,591.00	$969,331.00	$38,759.00
41	11/1/18	$62,628.00	$35,212.00	$758,575.00	$856,415.00	$34,244.00
42	12/1/18	$55,116.00	$30,989.00	$667,597.00	$753,702.00	$30,136.75
43	1/1/19	$49,689.00	$27,937.00	$601,849.00	$679,475.00	$27,169.10
44	2/1/19	$43,448.00	$24,428.00	$526,260.00	$594,136.00	$23,756.60
45	3/1/19	$37,892.00	$21,304.00	$458,953.00	$518,149.00	$20,718.60
46	4/1/19	$32,969.00	$18,537.00	$399,335.00	$450,841.00	$18,027.10
47	5/1/19	$28,629.00	$16,096.00	$346,765.00	$391,490.00	$15,653.75
48	6/1/19	$24,817.00	$13,953.00	$300,592.00	$339,362.00	$13,569.50
49	7/1/19	$21,481.00	$12,077.00	$260,176.00	$293,734.00	$11,745.30
50	8/1/19	$18,568.00	$10,440.00	$224,901.00	$253,909.00	$10,152.80
51	9/1/19	$16,032.00	$9,014.00	$194,190.00	$219,236.00	$8,766.10
52	10/1/19	$13,830.00	$7,775.00	$167,507.00	$189,112.00	$7,561.75
Total		$4,663,045.00	$2,621,750.00	$56,480,701.00	$63,765,496.00	$2,549,678.25

Interconnection Facilities Payment = (Interconnection Facilities Cost + Interconnection Facilities One-Time Cost) = $4,663,045.00

Distribution Upgrades Payment = (Distribution Upgrades Cost + Associated One-Time Cost) = $2,621,750.00

Reliability Upgrades Payment = (Reliability Upgrades Cost + Associated One-Time Cost) =$56,480,701.00

Transmission Credit pursuant to Section 7 of this Appendix A = $56,480,701.00

* ITCC/Estimated Tax Liability will be provided by Interconnection Customer in accordance with Appendix A, Section 10.

18) **Other Potential Facilities**:

The Interconnection Customer understands and acknowledges that the Interconnection of the LEAPS Generating Facility is dependent upon certain network upgrades which are currently the cost responsibility of projects ahead of the LEAPS Generating Facility in the Participating TO's Interconnection Application queue. In the event; (i) a project in the queue ahead of the LEAPS Generating Facility is withdrawn from the queue, or (ii) it is determined by the Participating TO or the CAISO that some or all of the network upgrades currently assigned to earlier-queued projects are no longer required by such projects, the Interconnection Customer may be responsible for an additional amount, up to the maximum cost exposure of the network upgrades identified in this Section 19 of this Appendix A. Such additional other potential facilities or network upgrades are taken from the Interconnection Facilities Study.

The Interconnection Customer's revised cost responsibility for the network upgrades will be reflected in an amendment to the LGIA. Such amendment shall be subject to FERC acceptance or approval.

While the Interconnection Customer is currently responsible for the Network Upgrades identified in Section 2 of this Appendix A, the Interconnection Customer may be responsible for all or a portion of the following other network upgrades, under the conditions described above:

A. Transmission:

1. Etiwanda-San Bernardino 220 kV Transmission Line:

    a. Upgrade the line by eliminating line-to-ground clearance restrictions which presently limit the line rating to lesser values than those of the existing 2-1033KCMIL ACSR conductors.
    b. This upgrade requires the raising of two existing suspension lattice structures and the installation of one additional interest dead-end transmission pole.
    c. This work also requires the lowering of existing distribution circuits at five locations and the undergrounding of one segment of 66 kV line at one location where the line crosses over them and also the trimming of some trees at three locations.

2. San Bernardino-Vista 220 kV Transmission Line:

    a. Upgrade the line by replacing 8.3 circuit miles of existing 2-1033KCMIL ACSR conductors with new 2-1590KCMIL ACSR. This includes the following modifications:

        i. Install two new double circuit lattice towers.
        ii. Replace eighteen double circuit lattice towers with similar structures.

    b. This work also requires the replacement of the existing hardware/insulator assemblies with new assemblies and polymer type insulators.

B. Substation:

1. Etiwanda Generating Station: Replace two 1200A disconnect switches on the San Bernardino 220 kV line position with 3000A rated equipment to support 60% of the highest contingency load of 3083A or 1855A.

2. San Bernardino Generating Station: Replace four 2000A disconnect switches on the Vista 220 kV line position with 3000A rated equipment to support 60% of the highest contingency load of 3745A or 2250A.

3. Vista Substation: Replace four 2000A disconnect switches on the San Bernardino 220 kV line position with 3000A rated equipment to support 60% of the highest contingency load of 3745A or 2250A.

4. Devers Substation:

   a. Replace seven 40kA, and one three-cycle 50 kV, 220 kV circuit breakers with new two-cycle 50 kA rated circuit breakers.
   b. Install three sets of TRV line-to-ground capacitors (total of nine units) to upgrade three 40 kA circuit breakers to 50 kA rating.

5. Lewis Substation: Replace two 45.6 kA, 220 kV circuit breakers with new 50 kA rated circuit breakers.

6. Lugo Substation:

   a. Replace three 50kA, 220 kV circuit breakers with new 63kA rated circuit breakers.
   b. Install four sets of TRV line-to-ground capacitors (total of twelve units) to upgrade two 50 kA circuit breakers to 63kA rating.

7. Mira Loma Substation:

   a. Replace twelve 63 kA, 220 kV circuit breakers with new 80 kA rated circuit breakers.
   b. Upgrade the 220 kV switchyard to 80 kA rating.
   c. The scope of work for the switchyard upgrade has not been completed at this time. A scope of work and cost estimate has been prepared for the upgrade of a similar facility. At this time it is expected that the type of upgrades for this location would be very similar to those already scoped and estimated for the similar facility. Based on this assumption, it is expected that, in addition to the work shown in 7a and 7b above, the following additional upgrades would be required:
      i. Replace twelve 220kV circuit breakers.
      ii. Replace twenty four 220 kV disconnect switches.
      iii. Replace seven 220 kV surge arresters.
      iv. Replace all line and bank vertical risers with tubular conductors.
      v. Replace all 4/0 CU connectors to the ground grid with new 350 kCMIL ACSR.
      vi. Install new sections of 350 kCMIL ACSR ground grid and connect to the existing 4/0 CU grid.

8. Corporate Real Estate and Permits: Acquire new permits and rights-of-way for the upgrade of the Etiwanda-San Bernardino and San Bernardino-Vista 220 kV transmission lines.

The maximum cost exposure for the other potential facilities shall be as follows:

Element	**Other Potential Facilities Costs**
Etiwanda-San Bernardino 220 kV T/L upgrade to eliminate ground clearances	$1,760,000
San Bernardino-Vista 220 kV T/L upgrade to 2-1590KCMIL	$11,700,000

ACSR	
Etiwanda Gen. Sta. Line Equipment Upgrades	$630,000
San Bernardino Gen. Sta. Line Equipment Upgrades	$1,260,000
Vista Sub. Line Equipment Upgrades	$1,260,000
Devers Sub. Replace 8 & upgrade 2 220 kV CBs	$4,740,000
Lewis Sub. Replace 2 220 kV CBs	$1,070,000
Lugo Sub. Replace 3 & upgrade 2 220 kV CBs	$2,240,000
Mira Loma Sub. Replace 12 220 kV CBS	$8,430,000
Mira Loma Sub. Upgrade 220 kV Switchyard to 80 kA rating	$16,800,000
Corporate Real Estate upgrade two 220 kV transmission lines.	$500,000
Total	$51,040,000

Appendix B
To LGIA

Milestones

1. **Interconnection Customer's Selected Option:** Pursuant to Article 5.1 of the LGIA, the Interconnection Customer has selected the Standard Option.

2. **Milestone Dates: Table B1**

Item	Milestone	Responsible Party	Due Date
(a)	Submit proof of insurance coverage in accordance with Article 18.3 of the LGIA	Interconnection Customer	On or before June 1, 2015
(b)	Submit written authorization to proceed with design and procurement of the Participating TO's Interconnection Facilities, Distribution Upgrades, and Network Upgrades to the Participating TO and CAISO pursuant to Article 5.5.2 of the LGIA	Interconnection Customer	Within thirty (30) Calendar Days of the Effective Date
(c)	Submit security for the Participating TO's Interconnection Facilities, Distribution Upgrades, and Network Upgrades to the Participating TO pursuant to Articles 5.6.4 and 11.5 of the LGIA	Interconnection Customer	As shown in Appendix A, Section 9(b), 9(c) and 9(d) Table B.3.
(d)	Submit written authorization to proceed with construction to the Participating TO and CAISO pursuant to Article 5.6.3 of the LGIA	Interconnection Customer	Within thirty (30) Calendar Days of the Effective Date
(e)	Submit security for the estimated tax liability to the Participating TO pursuant to Article 5.17.3 of the LGIA	Interconnection Customer	As shown in Appendix A, Section 10.
(f)	Completion of the Participating TO's Interconnection Facilities, Distribution Upgrades and Network Upgrades.	Participating TO	On or before October 1, 2019. *See Note 2 below..
			Within two (2) months following the Interconnection Customer's completion of the Interconnection Customer's Large Generating Facility and Interconnection Customer's Interconnection Facilities and completion by the Participating TO of the Participating TO's facilities as described in Appendix A of this LGIA. Note: final test

(g)	Test of RTU and RTU telecom equipment and all cutovers	Participating TO	of the RTU cannot occur until generator runs for approximately thirty days.
(h)	Submit initial specifications for the Interconnection Customer's Interconnection Facilities and Large Generating Facility, including system protection facilities, to the Participating TO and the CAISO as specified in Article 5.10.1 of the LGIA	Interconnection Customer	At least one hundred eighty (180) Calendar Days prior to the Initial Synchronization Date.
(i)	Initial information submission which shall include the Participating TO's Transmission System information necessary to allow the Interconnection Customer to select equipment, in accordance with Article 24.2 of the LGIA	Participating TO	At least one hundred eighty (180) Calendar Days prior to Trial Operation
(j)	Updated information submission by the Interconnection Customer, including manufacturer information in accordance with Article 24.3 of the LGIA	Interconnection Customer	No later than one hundred eighty (180) Calendar Days prior to Trial Operation
(l)	Review of and comment on the Interconnection Customer's initial specifications as specified in Article 5.10.1 of the LGIA	Participating TO and CAISO	Within thirty (30) Calendar Days of the Interconnection Customer's submission of initial specifications
(m)	Submit final specifications for the Interconnection Customer's Interconnection Facilities and Large Generating Facility, including system protection facilities, to the Participating TO and the CAISO as specified in Article 5.10.1 of the LGIA	Interconnection Customer	At least ninety (90) Calendar Days prior to the Initial Synchronization Date.
(n)	Review of and comment on the Interconnection Customer's final specifications as specified in Article 5.10.1 of the LGIA	Participating TO and CAISO	Within thirty (30) Calendar Days of the Interconnection Customer's submission of final specifications
(o)	Notification of Balancing Authority Area to the Participating TO and the CAISO pursuant to Article 9.2	Interconnection Customer	At least three (3) months prior to the Initial Synchronization Date of Project
(p)	Performance of a complete calibration test and functional trip test of the system protection facilities pursuant to Article 9.7.4.6 of the LGIA	Interconnection Customer and Participating TO	At least sixty (60) Calendar Days prior to the In-Service Date
(q)	In-Service Date	Interconnection Customer	October 1, 2019
(r)	Initial Synchronization Date	Interconnection Customer	October 1, 2019
(s)	Notification of operating communications and notifications information pursuant to Appendix F, of the LGIA	CAISO, Participating TO and Interconnection Customer	Prior to Initial Synchronization Date

(t)	Trial Operation	Interconnection Customer	October 1, 2019
(u)	Performance of a complete calibration test and functional trip test of the system protection facilities pursuant to Article 9.7.4.6 of the LGIA	Interconnection Customer and Participating TO	At least sixty (60) Calendar Days prior to the Commercial Operation Date
(v)	Testing of the Participating TO's Interconnection Facilities, Delivery Network Upgrades, Distribution Upgrades, and Network Upgrades and testing of the Interconnection Customer's Large Generating Facility and Interconnection Facilities in accordance with Article 6.1 of the LGIA	Interconnection Customer and Participating TO	At least sixty (60) Calendar Days prior to the Commercial Operation Date
(w)	Provide written approval to the Interconnection Customer for the operation of the Large Generating Facility in accordance with Article 6.1 of the LGIA	Participating TO	Within fifteen (15) Calendar Days prior to the Commercial Operation Date
(x)	Commercial Operation Date	Interconnection Customer	December 31, 2019
(y)	Submittal of "as-built" drawings, information and documents for the Interconnection Customer's Interconnection Facilities and the Electric Generating Units in accordance with Article 5.10.3 of the LGIA to the Participating TO and the CAISO	Interconnection Customer	Within one hundred twenty (120) Calendar Days after the Commercial Operation Date, unless otherwise agreed

Note 1: The Interconnection Customer understands and acknowledges that such timelines are only estimates and that equipment and material lead times, labor availability, outage coordination, regulatory approvals, or other unforeseen events could delay the actual beyond those specified.

The Interconnection Customer also understands and agrees that the method of service required to interconnect the LEAPS Generating Facility may require re-evaluation due to changes to the Participating TO's electrical system or addition of new generation.

*Note 2: The Interconnection Customer understands and acknowledges that such timeline is based on a fifty two (52) month design/engineering/permitting/procurement/construction/test schedule and may be revised if the Interconnection Customer's proposed In-Service Date is further revised, or pursuant to Note 1 above.

Appendix C
To LGIA

Interconnection Details

1. **Generating Facility:** All equipment and facilities comprising the LEAPS pumped storage generating facility in Lake Elsinore, California, as disclosed by the Interconnection Customer in its Interconnection Request and subsequent revisions to the Interconnection Request, which consists of a 500 MW generating facility comprising two, 250 MW Voith generators, 2.5 MW auxiliary load for a net output capacity of 497.5 MW, 600 MW of pump load, step-up transformers, meters and metering equipment and appurtenant equipment (the "LEAPS Generating Facility"). The Interconnection Customer attests that the original 250 MW Seimens generators and the 250 MW Voith generators are electrically identical and therefore no Material Modification exists.

2. **Interconnection Customer Operational Requirements**.

(a) Pursuant to Article 9.4 of the LGIA, the Interconnection Customer shall operate the LEAPS Generating Facility and the Interconnection Customer's Interconnection Facilities in accordance with the Participating TO's Tariff, the CAISO Tariff, and NERC requirements.

(b) The LEAPS Generating Facility shall be operated so as to prevent or protect against the following adverse conditions on the Participating TO's electric system: inadvertent and unwanted re-energizing of a utility dead line or bus; interconnection while out of synchronization; overcurrent; voltage imbalance; ground faults; generated alternating current frequency outside permitted safe limits; poor power factor or reactive power outside permitted limits; and abnormal waveforms.

3. **Interconnection Principles:**

(a) This LGIA provides for interconnection of a total capacity of 500 MW of generation and 600 MW of pump load, resulting from the interconnection of the LEAPS Generating Facility, as described in Section 1 of this Appendix C. The Interconnection Customer acknowledges that if the Interconnection Customer wishes to increase the amount of Interconnection capacity provided pursuant to this LGIA, the Interconnection Customer shall be required to submit a new Interconnection Request in accordance with the terms and conditions of the CAISO Tariff.

(b) The costs of any mitigation measures required to third party transmission systems resulting from the interconnection of LEAPS Generating Facility to the Participating TO's electrical system are not reflected in this LGIA. The Participating TO shall have no responsibility to pay costs associated with any such mitigation measures.

(c) In the event the Participating TO's Interconnection Facilities are utilized to provide retail service to the Interconnection Customer in addition to the wholesale Interconnection service provided herein, and the Interconnection Customer fails to make payment for such retail service in accordance with the Participating TO's applicable retail tariffs, the Participating TO's Interconnection Facilities may be removed from service to the Interconnection Customer, subject to the notice and other provisions of such retail tariffs, until payment is made by the Interconnection Customer pursuant to such retail tariffs.

(d) Review by the Participating TO of the electrical specifications, design, construction, operation, or maintenance of the LEAPS Generating Facility or the Interconnection Customer's Interconnection Facilities shall not constitute any representation as to the economic or technical feasibility, operational capability, or reliability of such facilities. The Interconnection Customer shall in no way represent to any third party that any such review by the Participating TO of such facilities, including, but not limited to, any review of the design, construction, operation, or maintenance of such facilities by the Participating TO, is a representation by the Participating TO as to the economic or technical feasibility, operational capability, or reliability of the LEAPS Generating

Facility or the Interconnection Customer's Interconnection Facilities.

(e) Potential LGIA Operations Conflict Resolution:
(i) Interconnection Customer has requested two points of interconnection for the LEAPS Generating Facility to the CAISO-Controlled Grid. The first point of interconnection is proposed to be with the system operated by San Diego Gas & Electric Company ("SDGE"). Interconnection Customer has previously entered into an interconnection agreement with CAISO and SDGE ("SDGE IA"). The second proposed point of interconnection is with the system operated by SCE.
(ii) If both interconnections are established, then the Interconnection Customer will be subject to the SDGE IA and this LGIA, with respect to their respective points of interconnection set forth in each interconnection agreement. After the execution of this LGIA, the Parties agree to enter into good faith discussions, at mutually convenient times and places to be arranged by Interconnection Customer, to informally discuss potential conflicts that may arise from the operation of two interconnection agreements relating to the same generating facility; provided that the following two conditions are met: first, that in this agreement to meet obligates the Parties to prospectively resolve potential conflicts and, second, that SDGE also appears at these discussions. The Parties may appear telephonically in these meetings.
(iii) In the event an actual conflict arises, the Parties agree to enter into good faith negotiations, at mutually convenient times and places to be arranged by Interconnection Customer, to address the resolution of such conflict; provided that the following two conditions are met: first, that nothing in this commitment to negotiate in good faith obligates the Parties to reach an agreement to resolve such conflict and, second, that SDGE also appears at these discussions. At these discussions, the Parties agree to undertake commercially reasonable efforts to enter into an agreement to address the manner in which such conflict, after it arises, is to be addressed.

4. Interconnection Operations:

(a) The Interconnection Customer shall cause the LEAPS Generating Facility to participate in any SPS required to prevent thermal overloads and unstable conditions resulting from outages. Such participation shall be in accordance with applicable FERC regulations, and CAISO Tariff provisions and protocols. The Interconnection Customer will not be entitled to any compensation from the Participating TO or the CAISO, pursuant to this LGIA, for loss of generation output when (i) the LEAPS Generating Facility generation is reduced or tripped off-line due to implementation of the SPS; or (ii) such generation output is restricted in the event the SPS becomes inoperable. Pursuant to Good Utility Practice, and consistent with Section 9.8.4 of this LGIA, the Participating TO will provide the Interconnection Customer advance notice of any required SPS.

(b) Following outages of the Interconnection Facilities or the LEAPS Generating Facility, the Interconnection Customer shall not energize the LEAPS Generating Facility for any reason without specific permission from the Participating TO's and the CAISO's operations personnel. Such permission shall not be unreasonably withheld.

(c) The Interconnection Customer shall maintain operating communications with the Participating TO's designated switching center. The operating communications shall include, but not be limited to, system parallel operation or separation, scheduled and unscheduled outages, equipment clearances, protective relay operations, and levels of operating voltage and reactive power.

(d) **Compliance with Applicable Reliability Standards:** The Interconnection Customer shall comply with all Applicable Reliability Standards for its Interconnection Customer's Interconnection Facilities and the LEAPS Generating Facility. The Participating TO will not assume any responsibility for complying with mandatory reliability standards for such facilities and offers no opinion whether the Interconnection Customer must register with NERC. If required to register with NERC, the Interconnection Customer shall be responsible for complying with all Applicable Reliability Standards for its Interconnection Customer's Interconnection Facilities and the LEAPS

Generating Facility, up to the Point of Change of Ownership as described in Section 4 of Appendix A of this LGIA.

Appendix D
To LGIA

Security Arrangements Details

Infrastructure security of CAISO Controlled Grid equipment and operations and control hardware and software is essential to ensure day-to-day CAISO Controlled Grid reliability and operational security. FERC will expect the CAISO, all Participating TOs, market participants, and Interconnection Customers interconnected to the CAISO Controlled Grid to comply with the recommendations offered by the President's Critical Infrastructure Protection Board and, eventually, best practice recommendations from the electric reliability authority. All public utilities will be expected to meet basic standards for system infrastructure and operational security, including physical, operational, and cyber-security practices.

The Interconnection Customer shall meet the requirements for security implemented pursuant to the CAISO Tariff, including the CAISO's standards for information security posted on the CAISO's internet web site at the following internet address: http://www.caiso.com/pubinfo/info-security/index.html.

Appendix E
To LGIA

Commercial Operation Date

This Appendix E is a part of the LGIA.

[Date]

Mr. Stephen Rutty
Director, Grid Assets
California Independent System Operator Corporation
250 Outcropping Way
Folsom, CA 95630

Mr. Robert Kott
Manager, Model and Contract Implementation
California Independent System Operator Corporation
250 Outcropping Way
Folsom, CA 95630

Mr. William Law
Manager, Grid Contracts Management
Southern California Edison Company
P. O. Box 800
2244 Walnut Grove Avenue
Rosemead, California 91770

Re: _____ Electric Generating Unit(s)

Dear Messrs, Rutty, Kott and Law:

On **[Date] Nevada Hydro Company** has completed Trial Operation of LEAPS Generating Facility Unit No. ___. This letter confirms that Nevada Hydro Company commenced Commercial Operation of LEAPS Generating Facility Unit No. ___ at the Electric Generating Unit, effective as of **[Date plus one day]**.

Thank you.

[Signature]

Nevada Hydro Company

c: Linda Wright (CAISO)

Appendix F
To LGIA

Addresses for Delivery of Notices and Billings

Notices:

1. General Notices:

CAISO	Participating TO	Interconnection Customer
Ms. Linda Wright	Manager, Grid Contracts Management	Rexford Wait
250 Outcropping Way Folsom, CA 95630	P. O. Box 600 Rosemead, CA 91770	2416 Cades Way Vista, CA 90281

2. Operating Communications and Notifications:

The CAISO, Participating TO and the Interconnection Customer shall provide for operating communications through their respective designated representatives as follows:

The Parties agree to exchange the following information within ten (10) Calendar Days prior to the LEAPS Generation Facility's Initial Synchronization Date:

CAISO	Participating TO	Interconnection Customer
CAISO Real Time Desk/24 Hour Telephone:	Grid Control Center/24 Hour Telephone:	*Operator Name and/or Title: Control Room Operator *24 Hour Telephone:
Alternate Phone:		*Operation Center Fax. No.: *E-mail:

3. Operational Matters, Force Majeure, and Outage Notices:

CAISO	Participating TO	Interconnection Customer
Name:	Name/Title:	Name/Title:
Phone:	Phone:	Phone:

4. For Emergencies:

CAISO	Participating TO	Interconnection Customer
Name:	Name/Title:	Name/Title:
Phone:	Phone:	Phone:

5. Billing and Payments:

CAISO	Participating TO	Interconnection Customer
Finance Dept.	Manager, Grid Contracts Management	Title:
Mr. Dennis Estrada		Name:
250 Outcropping Way Folsom, CA 95630	P. O. Box 600 Rosemead, CA 91770	Address:

6. Alternate Forms of Delivery of Notices (telephone, facsimile or e-mail):

CAISO	Participating TO	Interconnection Customer
lwright@caiso.com	Manager, Grid Contracts	

	Management Tel: (626) 302-9640 Fax: (626) 302-1152	Name/Title: Phone:

Appendix G
To LGIA

[Not Used]

Appendix H
To LGIA

INTERCONNECTION REQUIREMENTS FOR AN ASYNCHRONOUS GENERATING FACILITY

Appendix H sets forth interconnection requirements specific to all Asynchronous Generating Facilities. Existing individual generating units of an Asynchronous Generating Facility that are, or have been, interconnected to the CAISO Controlled Grid at the same location are exempt from the requirements of this Appendix H for the remaining life of the existing generating unit. Generating units that are replaced, however, shall meet the requirements of this Appendix H.

A. Technical Requirements Applicable to Asynchronous Generating Facilities

i. Low Voltage Ride-Through (LVRT) Capability

An Asynchronous Generating Facility shall be able to remain online during voltage disturbances up to the time periods and associated voltage levels set forth in the requirements below.

1. An Asynchronous Generating Facility shall remain online for the voltage disturbance caused by any fault on the transmission grid, or within the Asynchronous Generating Facility between the Point of Interconnection and the high voltage terminals of the Asynchronous Generating Facility's step up transformer, having a duration equal to the lesser of the normal three-phase fault clearing time (4-9 cycles) or one-hundred fifty (150) milliseconds, plus any subsequent post-fault voltage recovery to the final steady-state post-fault voltage. Clearing time shall be based on the maximum normal clearing time associated with any three-phase fault location that reduces the voltage at the Asynchronous Generating Facility's Point of Interconnection to 0.2 per-unit of nominal voltage or less, independent of any fault current contribution from the Asynchronous Generating Facility.

2. An Asynchronous Generating Facility shall remain online for any voltage disturbance caused by a single-phase fault on the transmission grid, or within the Asynchronous Generating Facility between the Point of Interconnection and the high voltage terminals of the Asynchronous Generating Facility's step up transformer, with delayed clearing, plus any subsequent post-fault voltage recovery to the final steady-state post-fault voltage. Clearing time shall be based on the maximum backup clearing time associated with a single point of failure (protection or breaker failure) for any single-phase fault location that reduces any phase-to-ground or phase-to-phase voltage at the Asynchronous Generating Facility's Point of Interconnection to 0.2 per-unit of nominal voltage or less, independent of any fault current contribution from the Asynchronous Generating Facility.

3. Remaining on-line shall be defined as continuous connection between the Point of Interconnection and the Asynchronous Generating Facility's units, without any mechanical isolation. Asynchronous Generating Facilities may cease to inject current into the transmission grid during a fault.

4. The Asynchronous Generating Facility is not required to remain on line during multi-phased faults exceeding the duration described in Section A.i.1 of this Appendix H or single-phase faults exceeding the duration described in Section A.i.2 of this Appendix H.

5. The requirements of this Section A.i of this Appendix H do not apply to faults that occur between the Asynchronous Generating Facility's terminals and the high side of the step-up transformer to the high-voltage transmission system.

6. Asynchronous Generating Facilities may be tripped after the fault period if this action is intended as part of a special protection system.

7. Asynchronous Generating Facilities may meet the requirements of this Section A.i of this Appendix H through the performance of the generating units or by installing additional equipment within the Asynchronous Generating Facility, or by a combination of generating unit performance and additional equipment.

8. The provisions of this Section A.i of this Appendix H apply only if the voltage at the Point of Interconnection has remained within the range of 0.9 and 1.10 per-unit of nominal voltage for the preceding two seconds, excluding any sub-cycle transient deviations.

The requirements of this Section A.i in this Appendix H shall not apply to any Asynchronous Generating Facility that can demonstrate to the CAISO a binding commitment, as of July 3, 2010, to purchase inverters for thirty (30) percent or more of the Generating Facility's maximum Generating Facility Capacity that are incapable of complying with the requirements of this Section A.i in this Appendix H. The Interconnection Customer must include a statement from the inverter manufacturer confirming the inability to comply with this requirement in addition to any information requested by the CAISO to determine the applicability of this exemption.

ii. Frequency Disturbance Ride-Through Capability

An Asynchronous Generating Facility shall comply with the off nominal frequency requirements set forth in the WECC Under Frequency Load Shedding Relay Application Guide or successor requirements as they may be amended from time to time.

iii. Power Factor Design Criteria (Reactive Power)

1. An Asynchronous Generating Facility shall operate within a power factor within the range of 0.95 leading to 0.95 lagging, measured at the Point of Interconnection as defined in this LGIA in order to maintain a specified voltage schedule, if the Phase II Interconnection Study shows that such a requirement is necessary to ensure safety or reliability. The power factor range standard can be met by using, for example, power electronics designed to supply this level of reactive capability (taking into account any limitations due to voltage level, real power output, etc.) or fixed and switched capacitors, or a combination of the two, if agreed to by the Participating TO and CAISO. The Interconnection Customer shall not disable power factor equipment while the Asynchronous Generating Facility is in operation. Asynchronous Generating Facilities shall also be able to provide sufficient dynamic voltage support in lieu of the power system stabilizer and automatic voltage regulation at the generator excitation system if the Phase II Interconnection Study shows this to be required for system safety or reliability.

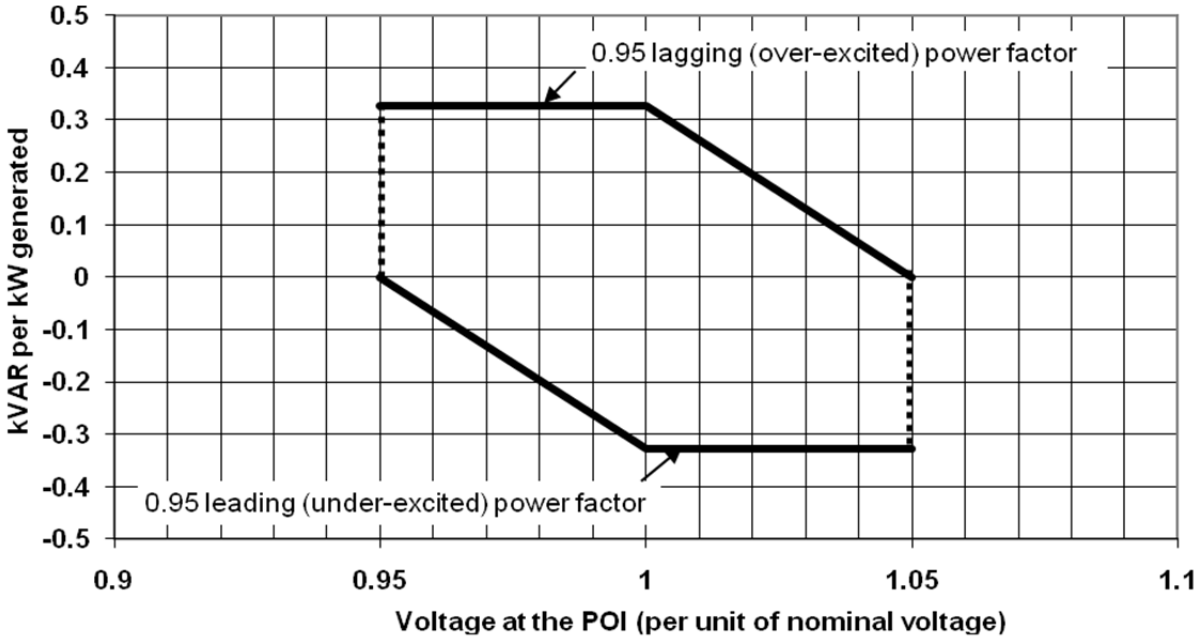

iv. Supervisory Control and Data Acquisition (SCADA) Capability

An Asynchronous Generating Facility shall provide SCADA capability to transmit data and receive instructions from the Participating TO and CAISO to protect system reliability. The Participating TO and CAISO and the Asynchronous Generating Facility Interconnection Customer shall determine what SCADA information is essential for the proposed Asynchronous Generating Facility, taking into account the size of the plant and its characteristics, location, and importance in maintaining generation resource adequacy and transmission system reliability.

v. Power System Stabilizers (PSS)

Power system stabilizers are not required for Asynchronous Generating Facilities.

Attachment 2

Letter to Southern California Edison

THE HYDRO COMPANY, INC.
DBA THE NEVADA HYDRO COMPANY, INC.

April 29, 2016

Robert Kang, Senior Attorney
Southern California Edison Company
2244 Walnut Grove Avenue
Rosemead, CA 91770

RE: Large Generator Interconnect Agreement for
the Lake Elsinore Advanced Pumped Storage Project
FERC Docket Nos. P–14227, ER12-1302 and ER12-1305

Dear Mr. Kang,

We appreciate you reaching out to help with the issues we are facing regarding the Large Generator Interconnect Agreement ("LGIA") for our Lake Elsinore Advanced Pumped Storage Project ("LEAPS"). We do have some concerns we need to address regarding both the obligations in the LGIA and issues raised in the recently published Draft Environmental Impact Report ("DEIR") prepared by the California Public Utilities Commission ("PUC") for Southern California Edison's ("SCE") proposed Alberhill substation project ("Alberhill").[1] As you know, Alberhill is designated as the connection point for LEAPS in the LGIA.

By way of background, you may not be aware but in 2007, the staff of the Federal Energy Regulatory Commission published a Final Environmental Impact Statement as required by the National Environmental Policy Act for LEAPS[2], in which, it determined the point at which LEAPS is to connect to the Valley–Serrano transmission line, identified therein as the "Lake" site. If this connection point had remained, we would have no need for this discussion. However, SCE insisted that its proposed Alberhill substation must be the point of interconnection. At a meeting I believe you attended at the PUC, SCE and the PUC agreed to work together to approve routing for LEAPS to connect to SCE's Alberhill site.

Based upon our review of the DEIR, we are extremely concerned that it provides no way for SCE to connect LEAPS to Alberhill and provides no facilities to connect into once there. Unfortunately, this seems largely as an apparent result of SCE's stumble to fulfill its contractual obligations as required under the LGIA provisions summarized in Attachment 1 (Selected Provisions of Concern from the LGIA). As a result of these perceived failures, SCE does not currently seem to be able to connect LEAPS to its transmission system as required by the LGIA.

---

[1] / The DEIR is available at http://www.cpuc.ca.gov/Environment/info/ene/alberhill/AlberhillIIDraftEIR.html

[2] / Federal Energy Regulatory Commission, *Final Environmental Impact Statement for Hydropower License – Lake Elsinore Advanced Pumped Storage Project*, FERC Project No. 11858, FERC/EIS-0191F, January 2007 ("Final EIS"). This document is now in the process of being updated in the present LEAPS docket, P–14227.

In its application to the PUC, SCE seems to have not (i) described its obligations from LGIA as one purpose of Alberhill, (ii) described its obligations to connect LEAPS at Alberhill, and (iii) provided its own substation single line drawing from the LGIA to the PUC.[3] In addition, the PUC apparently failed to assess the implications of the LGIA as a connected action under the California Environmental Quality Act ("CEQA"), and the CAISO, although a party to the LGIA, apparently did not inform the PUC of the LGIA, instead describing the connection as part of Nevada Hydro's proposed transmission project (see Table 3–1 of the DEIR on page 3–5 of Volume 1). These errors and omissions now have put Nevada Hydro in a position where there seems no way for LEAPS to connect to the Alberhill site identified in the DEIR, notwithstanding our joint obligations in the LGIA.

In addition to this significant apparent contractual lapse, SCE and the ISO are now insisting that Nevada Hydro commence payments under the LGIA when, due solely to the above described omissions, (i) LEAPS cannot reach the connection point SCE described in the LGIA and (ii) in spite of the detail in the LGIA (including a substation drawing) there are no facilities to accommodate this connection within the description of the substation in the DEIR.

Further, we had expressed concern to SCE that due to PUC approval delays, SCE may not be able to meet its LGIA commitments, and could find itself in breach of the agreement. Nevada Hydro did not see this outcome as appropriate, and proposed changes, which were partially accepted. Now, however with the changes SCE has asked us to consider, Nevada Hydro still cannot know when it might be able to energize LEAPS while now, SCE is apparently absolved of any potential penalties due to any delay it at least has partially caused (the remaining causation seems to rest at the feet of the PUC).

The PUC now seems to be faced with a "piecemealing" issue under CEQA,[4] and will need to revise the DEIR to include LGIA–related facilities as the connected action it is.[5] Otherwise, under what permitting scenario can Nevada Hydro obtain siting approval to reach the EIR–identified Alberhill site without triggering a CEQA fragmentation claim? I am sure this is potential litigation and delay none of us wish to face.

Perhaps, notwithstanding our understanding of how LEAPS is to connect under the LGIA, SCE has merely modified its plan for connecting LEAPS without informing Nevada Hydro or the CAISO? As you

---

[3] / SCE's Application and Amended Application, including the Proponents Environmental Assessment ("PEA") describing the purpose and need for the project as well as the project itself may be assessed at http://www.cpuc.ca.gov/Environment/info/ene/alberhill/Alberhill.html

[4] / The test expressed in the California Supreme Court's 1986 *Laurel Heights* decision: "an EIR must include an analysis of future expansion or other actions if: (1) it is a reasonably foreseeable consequence of the initial project, and (2) the future expansion or action will be significant in that it will likely change the scope or nature of the initial project or its environmental effects." See *Laurel Heights Improvement Ass'n v. Regents of Univ. of Cal*. (1988) 47 Cal. 3d 376.

[5] / CEQA requires the study of actions related to a proposed project in the environmental document. These "related actions" include "connected actions," "indirect impacts," and "cumulative impacts." Connected actions are activities that are related in such a way that they should be considered parts of a single action. Connected actions, because they are closely related, must be analyzed in the same CEQA document as the proposed action. See for example, *Assigned Commissioner's Ruling Addressing Newly Disclosed Environmental Information*, In the Matter of the Application of San Diego Gas & Electric Company (U 902 E) for a Certificate of Public Convenience and Necessity for the Sunrise Powerlink Transmission Project, Application 06-08-010, July 27, 2007, at Page 2.

can see in Attachment 2 (Extracted Image from page 84 of the LGIA), SCE still is obligated to connect LEAPS under this provision:

> *In the event that SCE modifies its plan for the Alberhill 500/115 kV Substation . . . then the Participating TO would develop an alternate plan to connect the Generating Facility to the Valley – Serrano 500kV Transmission Line. The alternate plan for connection to the Valley-Serrano 500kV Transmission Line may be subject to CPUC review and concurrence if this information has not yet been evaluated as part of the LGIP review process.* [Emphasis added]

Nevada Hydro has no idea how SCE intends to achieve this connection in a timely manner, using say Nevada Hydro's Lake site, nor how the PUC will address the "piecemealing" and other issues involving 2–500 kV loops into the Valley–Serrano line in such close proximity

We also understand that the CAISO refuses to acknowledge these problems, insisting that it will not permit changes to the LGIA schedules. I would hope that they will soften this intransigent position as there can be no other interconnection processes where apparent omissions by the interconnecting utility, the CAISO and the PUC all combined to prevent the interconnection from occurring notwithstanding agreements among the parties to the contrary.

We understand further that SCE and the CAISO have privately discussed provisions of our LGIA without including Nevada Hydro in these discussions. As this is a three party agreement, at minimum, the provisions of Section 3.3 of the LGIA could allow FERC to conclude that excluding Nevada Hydro from discussions on substantive issues involving the rights and responsibilities of all parties may be seen at least as violating the non–discriminatory provisions of FERC Order 1000. Unfortunately, in Nevada Hydro's view, the concerns we are addressing here are not the only ones we have with the other parties to our LGIA.

Mr. Kang, this complicated mess was clearly not caused by Nevada Hydro. Had any one of the following occurred, we would not be in this position:

a) SCE properly described its obligations under the LGIA in its PEA submittal to the PUC or at any time since the filing occurred.

b) The CAISO correctly explained to the PUC that the LGIA was for a large generator (LEAPS), not a transmission line

c) The PUC properly analyzed the information it already possessed.[6]

Nevada Hydro is, of course, prepared to work with you, the CAISO and the PUC to set things right. We suggest the following steps are required to cure the above described errors and omissions relative to the obligations set forth in the LGIA:

---

[6] / The PUC had a copy of the LGIA, and had detailed descriptions of the obligations in the LGIA in numerous filings Nevada Hydro made in a number of dockets.

1. SCE immediately provide notice to the PUC's Alberhill docket of its oversight in failing to provide to the PUC a complete description of its obligations under the LGIA and its intention to prepare and submit a revised PEA that will cure this oversight.
2. The CAISO is to submit comments to the PUC's Alberhill CEQA team before the filing deadline to correct the misconceptions of the PUC that appear in Table 3–1 of the DEIR on page 3–5 of Volume one, relative to the connection under the LGIA being for LEAPS and not for Nevada Hydro's proposed transmission project.
3. SCE is to submit comments to the PUC's Alberhill CEQA team before the filing deadline to correct the errors in the DEIR related to the omission of its responsibilities under the LGIA.
4. In their comments to the PUC in #1 and #2 above, both SCE and the CAISO are to "respectfully suggest" that that § 15088.5(a) of CCR Title 14 controls this situation, requiring recirculation of the DEIR following SCE's action described in #4, below.
5. Within 60 days, SCE is to prepare and submit to the PUC an amended PEA that fully encompasses its obligations under the LGIA.
6. Both SCE and the CAISO agree to reset the commencement of all payment schedules in the LGIA to 30 days after SCE's receipt of a Certificate of Public Convenience and Necessity for the Alberhill Substation (or another to–be–determined point of connection), including facilities necessary for LEAPS to connect thereto.

Mr. Kang, SCE (i) required Nevada Hydro to abandon FERC's Lake site and instead use SCE's proposed Alberhill substation, (ii) obligated itself to assure LEAPS a timely connection to the Valley Serrano line when it executed the LGIA and now (iii) seems to have failed to cause its plans to be realized with required and timely approvals. As a result, achieving its grid connection is at risk and the LEAPS project is thereby in jeopardy. Compounding this is the CAISO holding Nevada Hydro responsible for these delays clearly not of our doing.

We hope that neither SCE nor the CAISO wish to re–involve FERC in a second dispute over provisions of this LGIA, and prefer working with the parties to resolve these issues cooperatively.

Please let me know what questions you have.

Sincerely,

David Kates

David Kates
For The Nevada Hydro Company

Attachment 1
Selected Provisions of Concern from the LGIA

LGIA Section	What the Section Requires	Why Nevada Hydro is Concerned
4.3	This section describes the performance standard that the parties are to meet, which includes performing in accordance with "Applicable Laws and Regulations" as defined.	By failing to include a description of its obligations under the LGIA to the PUC, SCE may have violated provisions of the Public Utility Code and Rules of the PUC.
5.6	This section requires SCE to commence construction of Interconnection Facilities and Network Upgrades for which it is responsible as soon as practicable after receiving required approvals.	By failing to include a description of its obligations under the LGIA to the PUC, the DEIR does not include these required facilities and so SCE is unable to "commence construction" unless this omission is corrected by the PUC.
5.14	This section requires that the parties are to "cooperate with each other in good faith in obtaining all permits, licenses and authorization that are necessary to accomplish the interconnection."	SCE demanded that the interconnection point be moved from the Lake site identified in the Final EIS to Alberhill, thereby transferring permit authority for the interconnect from FERC to the PUC. By failing to include a description of its obligations under the LGIA to the PUC, the DEIR, and if unchanged, any CPCN the PUC issues would not include authorization "necessary to accomplish the interconnection." The CAISO, if it provided the misleading information that appears in Table 3–1 of the DEIR, may be seen to have acted in bad faith by describing to the PUC Nevada Hydro's transmission project rather than the obligations for LEAPS under the LGIA.
11.2	Article 11 details the performance obligation the parties have assumed. This subsection requires SCE to "design, procure, construct, install, own and/or control the Participating TO's Interconnection Facilities described in Appendix A.	By failing to include a description of its obligations under the LGIA to the PUC, the DEIR, if unchanged, and any CPCN the PUC might issue, would not allow SCE to fulfill this obligation.
14.1	This section requires that SCE "in good faith seek and use its Reasonable Efforts to obtain" required permits."	By failing to include a description of its obligations under the LGIA to the PUC, FERC, an arbitrator or other authority could find that SCE failed to exercise reasonable efforts or that could be seen instead as bad faith. The CAISO, if it provided the misleading information that appears in Table 3–1, may also be seen to have failed to exercise reasonable efforts or that it acted in bad faith by describing Nevada Hydro's transmission project rather than the obligations for LEAPS under the LGIA.
25.2	This section requires the parties to "notify the other Parties when the notifying Party becomes aware of its inability to comply with the provisions of this LGIA for a reason other than a Force Majeure event."	The omission of the facilities described in Appendix A from the DEIR would prevent SCE from complying with the provisions of this LGIA. SCE was therefore obligated to notify the CAISO and Nevada Hydro within a reasonable time from the PUC's release of the DEIR on April 14, 2016. As of this date, SCE has not provided this required notice.

Attachment 2
Extracted Image from page 84 of the LGIA

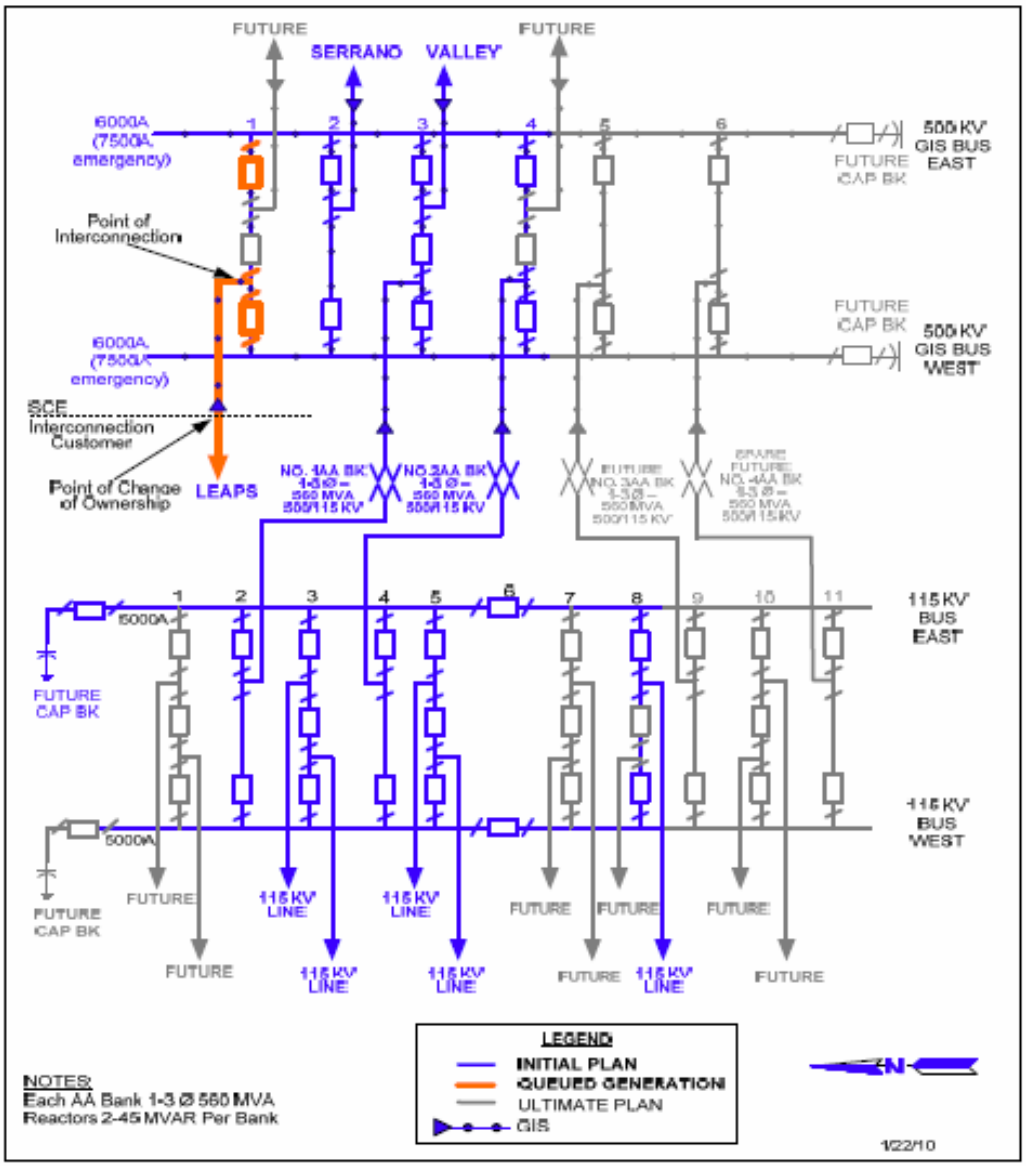

Note: The LEAPS Generating Facility is proposed to be connected to the Participating TO's Alberhill Substation Project. This substation project is still under development as part of the long-term transmission plan and has been approved by the CAISO Board. Also, a CPCN for the Alberhill 500/115 KV Substation and Valley/Serrano Line loop has been filed at the CPUC. In the event that SCE modifies its plan for the Alberhill 500/115 kV Substation, or the substation project does not receive CPUC approval, then the Participating TO would develop an alternate plan to connect the Generating Facility to the Valley – Serrano 500kV Transmission Line. The alternate plan for connection to the Valley-Serrano 500kV Transmission Line may be subject to CPUC review and concurrence if this information has not yet been evaluated as part of the LGIP review process.

Source: Page 201 of 228 of the pdf compliance filing SCE made with FERC on September 8, 2014 in Docket Nos. ER12-1302 and ER12-1305 (page 84 of the LGIA, Appendix A, Section 6).