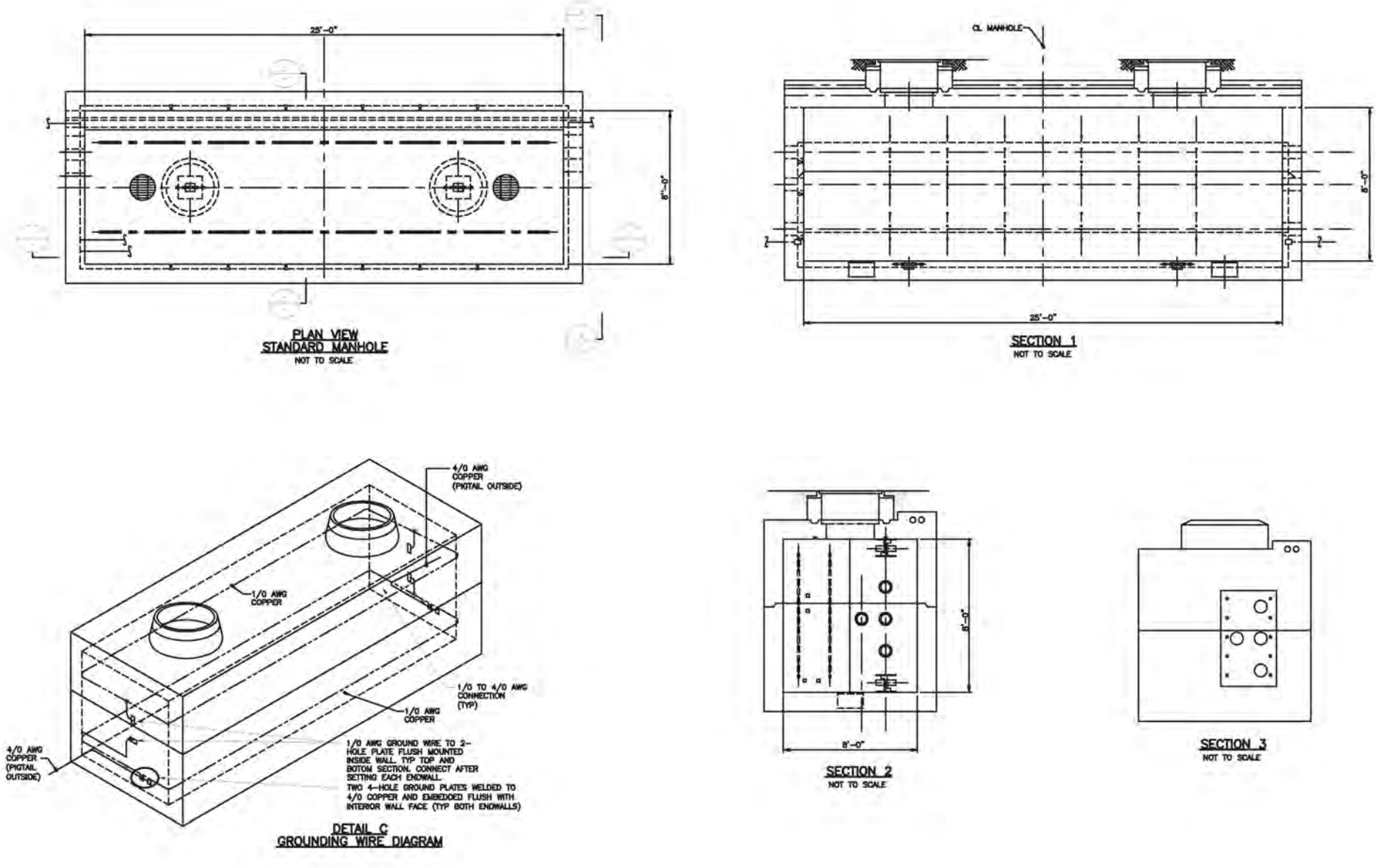

Source: PG&E, 2012.

Figure 4-7
Typical Manhole